CAE 希恩

2024 – J COLLECTION

M03010142

广 东 希 恩 卫 浴 实 业 有 限 公 司

CAE SANITARY FITTINGS INDUSTRY CO.,LTD.GUANGDONG

地址：广东省开平市水口镇沙冈兴达路 62-64 号　　邮编 (PC)：529321

Add：No. 62-64, Xingda Rd., Shagang Dist., Shuikou Town,
Kaiping, Guangdong, P.R. of China.

(中国营销部) Domestic:

电话 (Tel)：0750-2712668　2169088

传真 (Fax)：0750-2716328

E-mail:cae2@china-cae.com

International:

电话 (Tel)：+86-750-2169890　2169883

传真 (Fax)：+86-750-2169138

E-mail:cae@china-cae.com

https://www.china-cae.com/

因本公司技术不断改进，特保留无须提前通知即可更新产品型号及技术标准的权利。

Due to the continuous technology improvement.
we reserve rights for updating product codes and technical standard.



CAE

Design comes from life, Detail makes quality.

设计源于生活，细节成就品质。

Fashionable sculpture,
With the illation of the simplism.
Italian classic design,
Well crafted,
Simple lines,
Stylish designs...
The inspiration of thinking from square to round,
The fashionable style.

用现代简约演绎时尚风采。
意大利经典设计，
细致的雕琢，
简约的线条，
时尚的设计风格……
从方与圆的灵感
打造时尚的品位。

Company Profile

公司简介

CAE, established in 1998, with location at Kaiping city, Guangdong, mainly produces CAE brand faucets and bathroom accessories.

With innovative design, intelligent aesthetic, mature workmanship, precise inspection, systemic management and premium quality, CAE's products are sold well in many countries and regions overseas. CAE is always dedicated in providing personalized sanitary products and an unforgettable water experience for worldwide customers.

CAE understands water and loves water, discovers the wisdom and charm of water. With unique design, fine quality, durable structure, plenty of choices, CAE's products meet different needs in different markets for classical, modern, simple, or luxury style and so on. It interprets different styles from different series, and different finishes are available on the same product, to create personalized solutions and reliable quality for you. CAE expects to share the tender joy with you.

广东希恩卫浴实业有限公司创立于 1998 年，位于中国广东省开平市，交通便利、环境优美，主要生产销售 CAE（希恩）水龙头、五金挂件等卫浴五金产品。

创新的设计、智慧的美学、成熟的工艺、严谨的检测、系统的管理、优良的品质，让希恩卫浴产品远销海外等多个国家和地区，致力为全球用户提供个性化产品，达到并超越客户的期望值，提供令人难以忘怀的水浴体验。

CAE（希恩）懂水、爱水，演绎水智慧，品味水的魅力。CAE（希恩）产品的设计独特，品质优良，结构坚固耐用，产品种类繁多，能够满足传统、现代、简约、奢华等各种环境风格的不同需求。不同系列演绎不同的风格，同一产品具有多种饰面可供选择，可为您打造个性化的产品方案，带您感受水的趣味。期待您与我们同享柔情之心的欢乐。



Brand / 品牌

As an enduring brand, with solid foundation, CAE glows exuberant vitality. We believe quality is the base of the brand. In creating mature craft and original design, we make efforts to provide customers with demanded service and quality. Thanks to such tenet and the blazing sense of responsibility, CAE gains good reputation in sanitary fittings field and marketing share with the continuous support and trust from domestic and foreign agents, distributors and consumers.

作为一个历久弥新的品牌，在具备丰富沉淀的同时焕发旺盛的活力。CAE（希恩）坚信，品质是品牌的基石。在打造成熟的工艺与原创设计的同时，我们不懈于提供客户需求的服务品质。CAE（希恩）将不断创新，让品牌与您产生互动，让其深入人心。

Vision / 愿景

With the philosophy of technical innovation and commitment to advanced technology, high product quality and after-sales service, CAE creates personalized kitchen and bath styles with Italian simple stylish design, being a brand that customers are happy to choose and to trust.

CAE（希恩）本着创新厨卫用水科技的企业宗旨，以简约时尚的意大利设计风格、成熟的生产工艺、精心制作的产品打造 CAE（希恩）品质，让全球用户乐于选择、忠于信赖。

Products / 产品

CAE engages itself to the wise application of the high-tech theories, focusing on every detail in production process. CAE insists to provide quality products for customers with its wisdom and meticulous technology.

CAE（希恩）执着于生产环节中的每个细节，不断开拓和引进业界先进的生产技术，组建核心优势。CAE（希恩）坚信制造优质的产品同时，更应赋予产品使用之外的内涵与价值。

Service / 服务

For years, CAE is committed to satisfy the needs of customers, means that all aspects of our company are consistently being reviewed, improved and upgraded to provide high-quality products and services. At CAE, we strongly believe in 'creating value for our customers and sharing our success with our clients'.

CAE（希恩）在发展进程中，以始终满足客户的需求为目标，保持信赖美誉。我们深知您赋予我们的信任是藉由每一个产品而生；我们的责任感基于每一个合作伙伴的交往而生。

Craftsmanship

制造工艺

CAE upholds the rigor of Italian manufacturing workmanship, adheres to original and unique design. We achieve high-quality bathroom products by keeping on continuous innovation in research and development technology, continuous refinement in manufacturing workmanship, standardized production management, scientific production flow chart, well-developed real-time detection and inspection.

CAE（希恩）秉承意大利设计与制造工艺的严谨，以坚持原创独特的设计，不断创新的研发技术，精益求精的制造工艺，标准化的生产管理，科学规范的生产流程，完善的实时检测检验，成就高品质的卫浴产品。





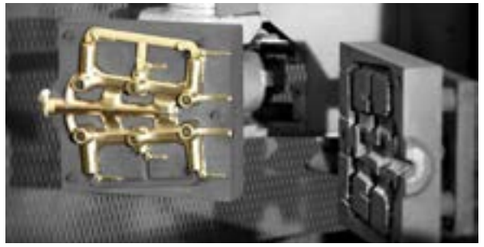

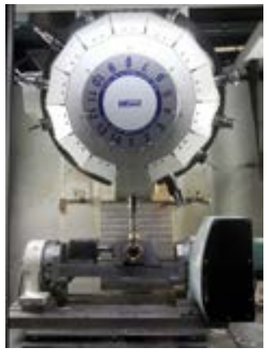











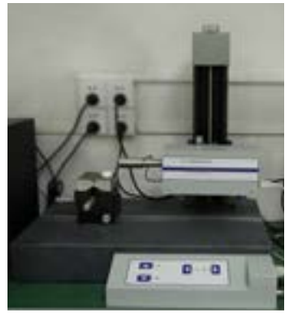





Laboratory part: instruments for life cycle test, material analysis, and salt spray test for faucets and components, including acid salt spray test and neutral salt spray test.

实验室部分：龙头和组件使用寿命测试仪器，物料分析仪器和盐雾测试，包括酸性盐雾测试和中性盐雾测试。

CAE focuses on each product with an attitude of perseverance, and strictly controls every detail of material inspection, manufacturing and product assembling to ensure that every product adds luster to CAE.

CAE（希恩）以锲而不舍的态度专注于每一个产品，严格把控材料检验、制造和装配的每个细节，确保每个产品都为 CAE（希恩）增光添彩。

Product Design

研发设计



ITAMAR HARARI, famous Italian architectural designer, is chief of R&D designer team. He works together with CAE's designers, combining classical Italian design with new art to create fruits of intelligence. It's the pursuit of CAE to continuously enrich design of product line's combined function.

The core value displays a fusion of ergonomic design, fashionable style, easy operation and strong durability, to ensure the design is user-centered.

ITAMAR HARARI is good at combining simple lines and curves, breaking through the design of minimalist geometric shapes, interpreting the simple style with romantic curves, and radiating a simple and stylish temperament with a unique shape.

聘请意大利设计师 ITAMAR HARARI 哈拉里担任首席研发设计师，及 CAE（希恩）公司优秀的设计师组成的专业设计团队，将意大利经典与智慧美学相融合，用创意演绎智慧的结晶，同时不断丰富产品线的组合功能的设计是 CAE（希恩）的追求。

设计符合人体工学，风格时尚， 操作简便，坚固耐用是 CAE（希恩）产品设计的核心价值，以确保我们的设计以用户使用价值为出发点。

ITAMAR HARARI 哈拉里，擅长把简约的线条和曲线结合，突破简约主义几何形体束缚的设计，以浪漫的曲线演绎简约的格调，以独特的造型焕发着简约时尚的气质。

Worldwide Certifications

认证



DNV ISO9001, ISO14001, ISO45001
挪威船级社质量管理体系、环境管理体系、职业健康安全管理体系认证

ASME A112.18.1-2018/CSA B125.1-18
NSF/ANSI 372-2016
美国 CUPC 及 AB1953 认证

NSF/ANSI 61

NSF/ANSI/CAN 61-2019
美国 NSF61 认证

EPA's WaterSense High Effciency Lavatory Faucet Specification
(Version 1.0, 10-01-2007 edition)
美国节水认证

AS/NZS 3718:2005-Water Supply-Tap ware
AS/NZS 3662:2005-Performance of showers for bathing
澳大利亚 Watermark 认证

IF DESIGN AWARD
IF 产品设计奖

INDEX
目录

CONCEALED SHOWER / BATH MIXER
单把入墙淋浴 / 浴缸龙头



1-WAY CONCEALED SHOWER MIXER COMBINATION **P 001**
1 功能单把入墙淋浴龙头



2-WAY CONCEALED SHOWER / BATH MIXER COMBINATION **P 015**
2 功能单把入墙淋浴 / 浴缸龙头



3-WAY CONCEALED SHOWER / BATH MIXER COMBINATION **P 043**
3 功能单把入墙淋浴 / 浴缸龙头

CONCEALED SHOWER / BATH MIXER (HORIZONTAL TYPE)
单把入墙淋浴 / 浴缸龙头（横式）



2-WAY CONCEALED SHOWER / BATH MIXER COMBINATION (HORIZONTAL TYPE) **P 067**
2 功能单把入墙淋浴 / 浴缸龙头（横式）



2-WAY CONCEALED SHOWER MIXER COMBINATION (HORIZONTAL TYPE) **P 073**
2 功能单把入墙淋浴龙头（横式）



3-WAY CONCEALED SHOWER / BATH MIXER COMBINATION (HORIZONTAL TYPE) **P 079**
3 功能单把入墙淋浴 / 浴缸龙头（横式）

THERMOSTATIC CONCEALED SHOWER / BATH MIXER
恒温入墙淋浴 / 浴缸龙头



2-WAY THERMOSTATIC CONCEALED SHOWER / BATH MIXER COMBINATION **P 085**
2 功能恒温入墙淋浴 / 浴缸龙头



2-WAY THERMOSTATIC CONCEALED SHOWER / BATH MIXER COMBINATION **P 095**
2 功能恒温入墙淋浴 / 浴缸龙头



3-WAY THERMOSTATIC CONCEALED SHOWER / BATH MIXER COMBINATION **P 101**
3 功能恒温入墙淋浴 / 浴缸龙头



3-WAY THERMOSTATIC CONCEALED SHOWER / BATH MIXER COMBINATION **P 111**
3 功能恒温入墙淋浴 / 浴缸龙头

CONCEALED SHOWER / BATH MIXER FITTINGS
入墙淋浴 / 浴缸龙头配件



WALL-MOUNTED HANDSHOWER SET **P 125**
入墙式手握花洒组



WALL-MOUNTED HANDSHOWER SET **P 127**
壁挂式手握花洒组



WALL-MOUNTED SLIDING BAR WITH HANDSHOWER SET **P 129**
壁挂式升降杆花洒组



HANDSHOWER SET **P 131**
手握花洒组



HANDSHOWER **P 133**
手握花洒



SLIDING BAR **P 135**
淋浴升降杆



SHOWER ARM WITH SHOWER HEAD **P 141**
淋浴龙头花洒组



OVERHEAD RAIN SHOWER **P 143**
头顶花洒



SHOWER ARM **P 147**
淋浴龙头花洒管



SHOWER WALL OUTLET / SHOWER HOLDER **P 149**
入墙淋浴出水件 / 花洒座



FLEXIBLE HOSE **P 150**
花洒软管



TUB SPOUT **P 151**
浴缸出水嘴



FINISHE **P 153**
表面处理

1-WAY CONCEALED SHOWER MIXER COMBINATION

1 功能单把入墙淋浴龙头

1-way concealed shower mixer combination
1 功能单把入墙淋浴龙头



75C 0643 A101 C
1-way concealed shower mixer combination
1 功能单把入墙淋浴龙头

B



② **10020064301(75)**
Concealed shower mixer
淋浴本体组

/100200674**
Rough-in shower valve
淋浴本体组阀体

④ **50030249101**
Wall-mounted handshower set
入墙式手握花洒组

75C 0643 B101 C
1-way concealed shower mixer combination
1 功能单把入墙淋浴龙头

C

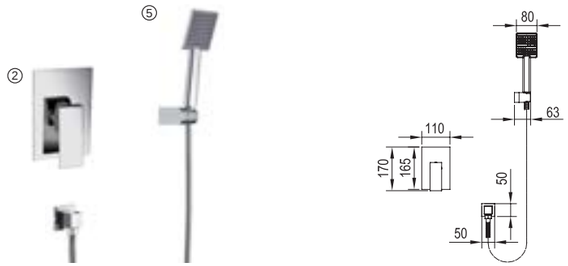

75C 0643 C101 C
1-way concealed shower mixer combination
1 功能单把入墙淋浴龙头

② **10020064301(75)**
Concealed shower mixer
淋浴本体组

/100200674**
Rough-in shower valve
淋浴本体组阀体

⑤ **50030244601**
Wall-mounted handshower set
壁挂式手握花洒组

D

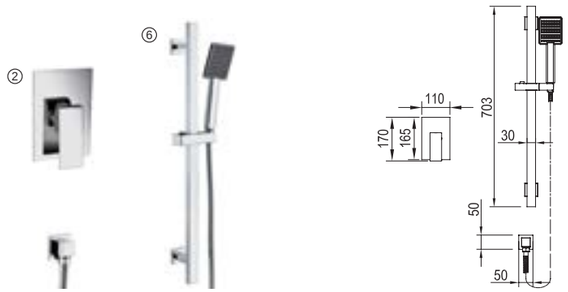

75C 0643 D102 C
1-way concealed shower mixer combination
1 功能单把入墙淋浴龙头

② **10020064301(75)**
Concealed shower mixer
淋浴本体组

/100200674**
Rough-in shower valve
淋浴本体组阀体

⑥ **H8 7699C**
Wall-mounted sliding bar with handshower set
壁挂式升降杆花洒组

E

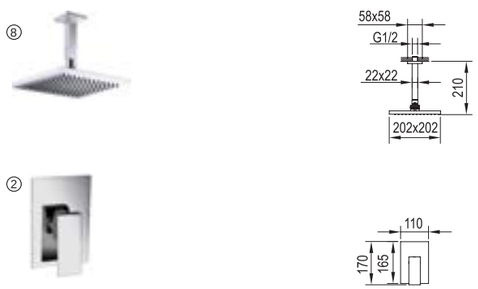

75C 0643 E101 C
1-way concealed shower mixer combination
1 功能单把入墙淋浴龙头

⑧ **50030269701**
Ceiling shower arm with shower head (8")
顶置式花洒组 (8")

② **10020064301(75)**
Concealed shower mixer
淋浴本体组

/100200674**
Rough-in shower valve
淋浴本体组阀体

1-way concealed shower mixer combination
1 功能单把入墙淋浴龙头

1-way concealed shower mixer combination
1 功能单把入墙淋浴龙头

B



37C 0637 B101C
1-way concealed shower mixer combination
1 功能单把入墙淋浴龙头

A









① **50030114701**
Shower arm with shower head (8")
淋浴龙头花洒组 (8")

② **10020063701(37)**
Concealed shower mixer
淋浴本体组

/100200677**
Rough-in shower valve
淋浴本体组阀体

37C 0637 A101C
1-way concealed shower mixer combination
1 功能单把入墙淋浴龙头

C



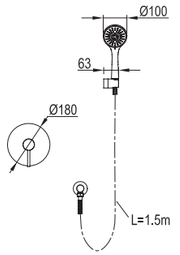

37C 0637 C101C
1-way concealed shower mixer combination
1 功能单把入墙淋浴龙头

② **10020063701(37)**
Concealed shower mixer
淋浴本体组

/100200677**
Rough-in shower valve
淋浴本体组阀体

⑤ **50030251101**
Wall-mounted 3-jet handshower set
3 功能壁挂式手握花洒组

D



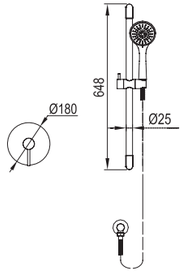

37C 0637 D101C
1-way concealed shower mixer combination
1 功能单把入墙淋浴龙头

② **10020063701(37)**
Concealed shower mixer
淋浴本体组

/100200677**
Rough-in shower valve
淋浴本体组阀体

⑥ **H8 7648C**
Wall-mounted sliding bar with 3-jet handshower set
3 功能壁挂式升降杆花洒组

E



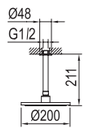





⑧ **50030269801**
Ceiling shower arm with shower head (8")
顶置式花洒组 (8")

② **10020063701(37)**
Concealed shower mixer
淋浴本体组

/100200677**
Rough-in shower valve
淋浴本体组阀体

37C 0637 E101C
1-way concealed shower mixer combination
1 功能单把入墙淋浴龙头

1-way concealed shower mixer
1 功能淋浴本体组

Shower arm with shower head
淋浴龙头花洒组

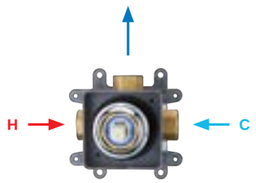

100200674(G1/2)(Φ45)**
100200677(G1/2)(Φ48)**
Rough-in shower valve
淋浴本体组阀体

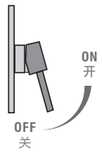

ON / OFF
开 / 关

Lift handle to turn water on and adjust water volume.
提起手柄开启并调节水量。

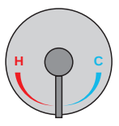

TEMPERATURE ADJUSTMENT
温度调节

Rotate handle counterclockwise for cold water.
Rotate handle clockwise for hot water.
逆时针旋转手柄调节冷水。
顺时针旋转手柄调节热水温度。

100200674(Φ45)**
适用以下产品　Rough-in shower valve is available for products



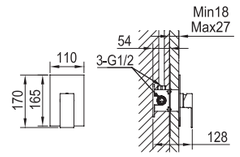

10020064301(75)
Concealed shower mixer
淋浴本体组

100200677(Φ48)**
适用以下产品　Rough-in shower valve is available for products



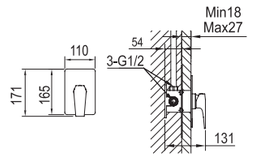

10020099501(34)
Concealed shower mixer
淋浴本体组



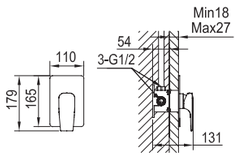

10020157101(65)
Concealed shower mixer
淋浴本体组



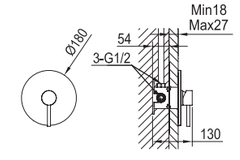

10020063701(37)
Concealed shower mixer
淋浴本体组

1-way concealed shower mixer combination technical parameter
1 功能单把入墙淋浴龙头技术参数

• Mounting 安装	Connections: G1/2 Included 连接件：包括 G1/2
• Material 材料	Body: Brass 主体：黄铜 Handle: Zinc alloy 手柄：锌合金
• Cartridge 阀芯	Type: Ceramic 类型：陶瓷 Size: 40mm 尺寸：40mm

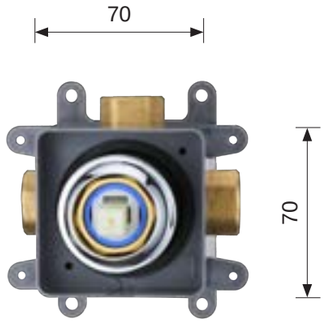

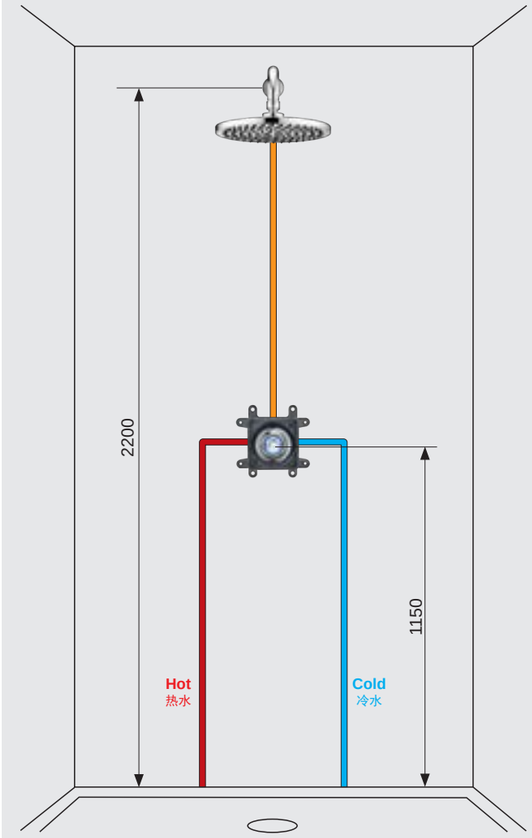

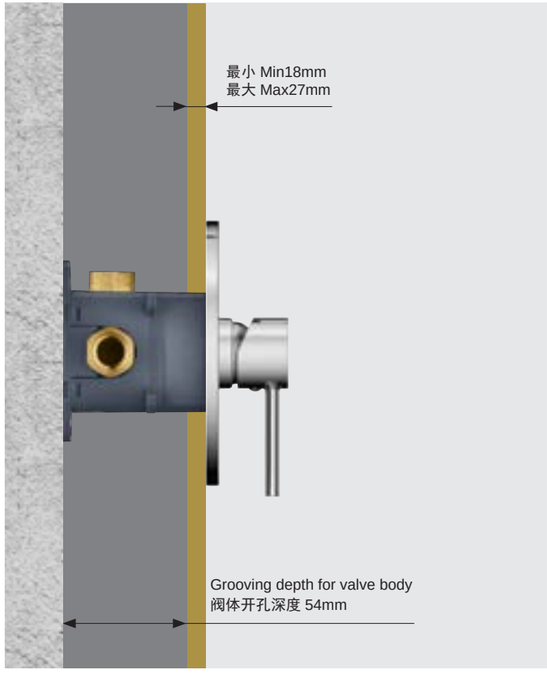



1-way concealed shower mixer combination
1 功能单把入墙淋浴龙头

1-way concealed shower mixer combination technical parameter
1 功能单把入墙淋浴龙头技术参数

• Mounting 安装	Connections: G1/2 Included 连接件：包括 G1/2
• Material 材料	Body: Brass 主体：黄铜 Handle: Zinc alloy 手柄：锌合金
• Cartridge 阀芯	Type: Ceramic 类型：陶瓷 Size: 40mm 尺寸：40mm

1-way concealed shower mixer
1 功能淋浴本体组

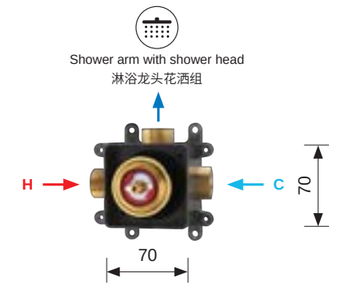

10020251000
Rough-in shower valve
淋浴本体组阀体

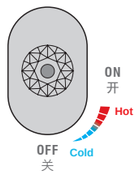

ON / OFF
开 / 关
Rotate handle counterclockwise to turn water on.
逆时针旋转手柄打开水。

TEMPERATURE ADJUSTMENT
温度调节
Rotate handle counterclockwise to cycle from cold to hot water.
逆时针旋转手柄，从冷水逐渐到热水。



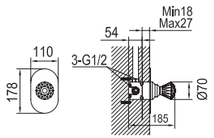

10020250705 (09)
Concealed shower mixer
淋浴本体组

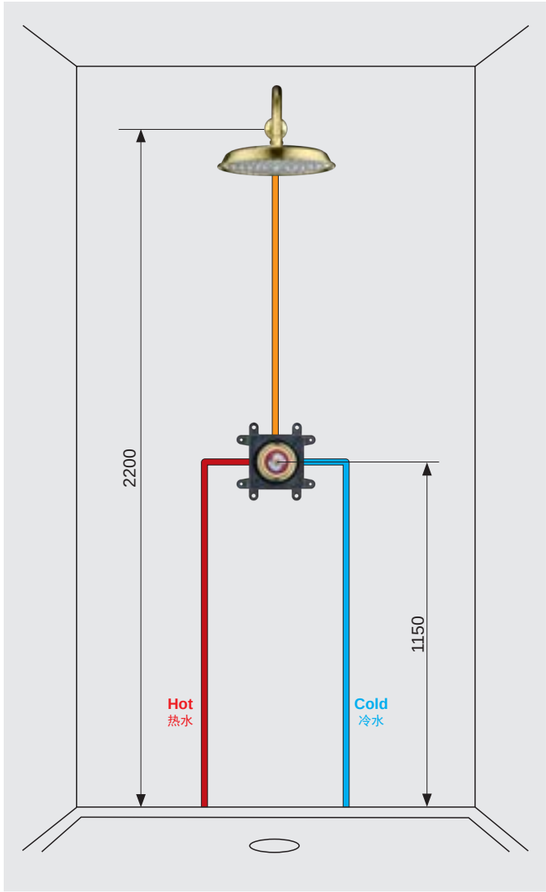

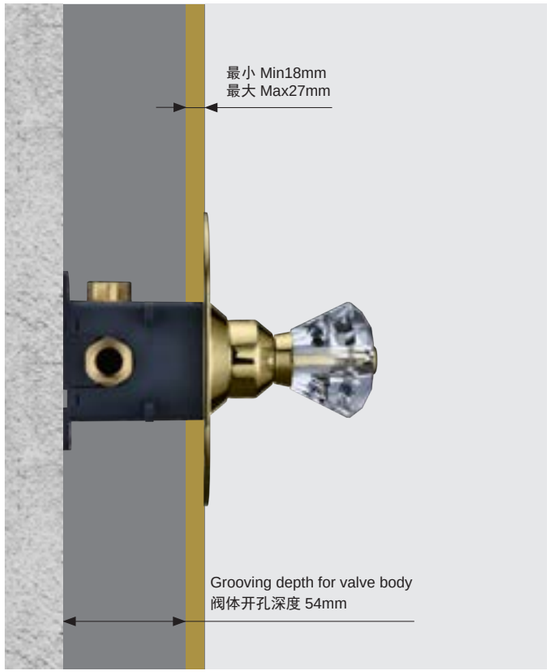

1-way concealed shower mixer combination
1 功能单把入墙淋浴龙头





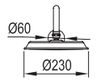



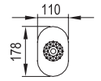

09C 2507 A101 G
1-way concealed shower mixer combination
1 功能单把入墙淋浴龙头

A

① **50030280305**
Shower arm with 8" shower head
淋浴龙头花洒组 (8")

② **10020250705 (09)**
Concealed shower mixer
淋浴本体组

/10020251000
Rough-in shower valve
淋浴本体组阀体

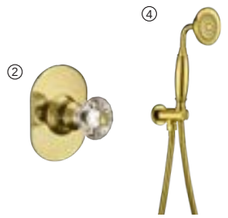

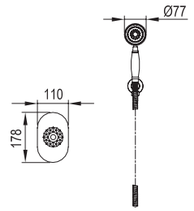

09C 2507 B101 G
1-way concealed shower mixer combination
1 功能单把入墙淋浴龙头

B

② **10020250705 (09)**
Concealed shower mixer
淋浴本体组

/10020251000
Rough-in shower valve
淋浴本体组阀体

④ **50030277005**
Wall-mounted handshower set
入墙式手握花洒组

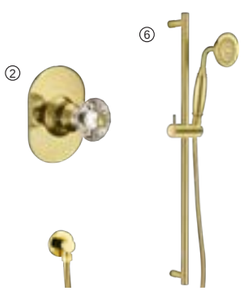

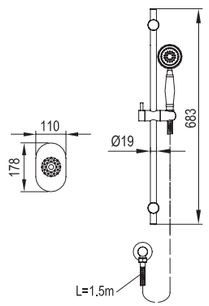

09C 2507 D101 G
1-way concealed shower mixer combination
1 功能单把入墙淋浴龙头

D

② **10020250705 (09)**
Concealed shower mixer
淋浴本体组

/10020251000
Rough-in shower valve
淋浴本体组阀体

⑥ **H8 7670G**
Wall-mounted sliding bar with handshower set
壁挂式升降杆花洒组



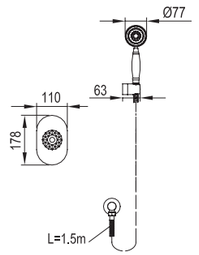

09C 2507 C101 G
1-way concealed shower mixer combination
1 功能单把入墙淋浴龙头

C

② **10020250705 (09)**
Concealed shower mixer
淋浴本体组

/10020251000
Rough-in shower valve
淋浴本体组阀体

⑤ **50030276905**
Wall-mounted handshower set
壁挂式手握花洒组

2-WAY CONCEALED SHOWER/ BATH MIXER COMBINATION

2 功能单把入墙淋浴 / 浴缸龙头

2-way concealed shower / bath mixer combination
2 功能单把入墙淋浴 / 浴缸龙头

C



75C 0888 C202 C
2-way concealed shower mixer combination
2 功能单把入墙淋浴龙头

A

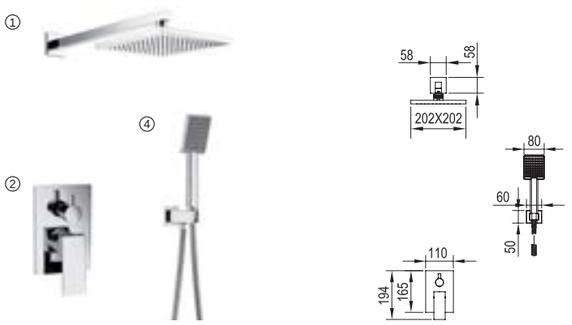

75C 0888 A201 C
2-way concealed shower mixer combination
2 功能单把入墙淋浴龙头

① **50030224501**
Shower arm with shower head (8")
淋浴龙头花洒组 (8")

② **10020088801(75)**
Concealed shower / bath mixer
淋浴 / 浴缸本体组

/100200679**
Rough-in shower / bath valve
淋浴 / 浴缸本体组阀体

④ **50030249101**
Wall-mounted handshower set
入墙式手握花洒组

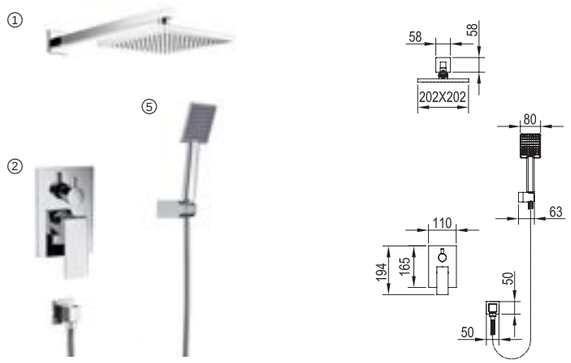

75C 0888 B201 C
2-way concealed shower mixer combination
2 功能单把入墙淋浴龙头

B

① **50030224501**
Shower arm with shower head (8")
淋浴龙头花洒组 (8")

② **10020088801(75)**
Concealed shower / bath mixer
淋浴 / 浴缸本体组

/100200679**
Rough-in shower / bath valve
淋浴 / 浴缸本体组阀体

⑤ **50030244601**
Wall-mounted handshower set
壁挂式手握花洒组

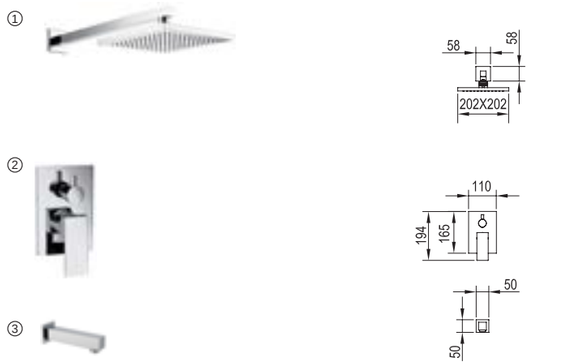

75C 0888 D201 C
2-way concealed shower / bath mixer combination
2 功能单把入墙淋浴 / 浴缸龙头

D

① **50030224501**
Shower arm with shower head (8")
淋浴龙头花洒组 (8")

② **10020088801(75)**
Concealed shower / bath mixer
淋浴 / 浴缸本体组

/100200679**
Rough-in shower / bath valve
淋浴 / 浴缸本体组阀体

③ **30020041801**
Tub spout
浴缸出水嘴

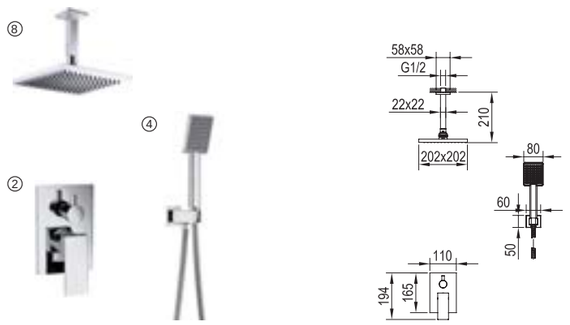

75C 0888 E201 C
2-way concealed shower mixer combination
2 功能单把入墙淋浴龙头

E

⑧ **50030269701**
Ceiling shower arm with shower head (8")
顶置式花洒组 (8")

② **10020088801(75)**
Concealed shower / bath mixer
淋浴 / 浴缸本体组

/100200679**
Rough-in shower / bath valve
淋浴 / 浴缸本体组阀体

④ **50030249101**
Wall-mounted handshower set
入墙式手握花洒组

2-way concealed shower / bath mixer combination

2 功能单把入墙淋浴 / 浴缸龙头

2-way concealed shower / bath mixer combination
2 功能单把入墙淋浴 / 浴缸龙头



E

37C 0638 E201 C
2-way concealed shower mixer combination
2 功能单把入墙淋浴龙头

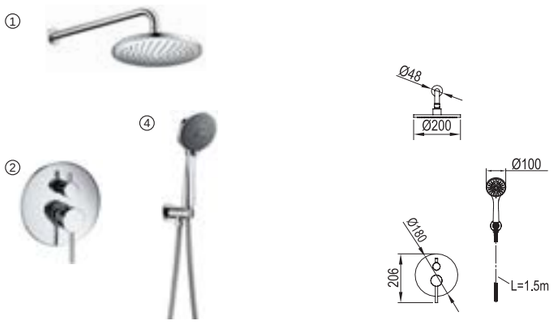

A

① **50030114701**
Shower arm with shower head (8")
淋浴龙头花洒组 (8")

② **10020063801(37)**
Concealed shower / bath mixer
淋浴 / 浴缸本体组

/100200708**
Rough-in shower / bath valve
淋浴 / 浴缸本体组阀体

④ **50030248601**
Wall-mounted 3-jet handshower set
3 功能入墙式手握花洒组

37C 0638 A201 C
2-way concealed shower mixer combination
2 功能单把入墙淋浴龙头



B

① **50030114701**
Shower arm with shower head (8")
淋浴龙头花洒组 (8")

② **10020063801(37)**
Concealed shower / bath mixer
淋浴 / 浴缸本体组

/100200708**
Rough-in shower / bath valve
淋浴 / 浴缸本体组阀体

⑤ **50030251101**
Wall-mounted 3-jet handshower set
3 功能壁挂式手握花洒组

37C 0638 B201 C
2-way concealed shower mixer combination
2 功能单把入墙淋浴龙头



C

① **50030114701**
Shower arm with shower head (8")
淋浴龙头花洒组 (8")

② **10020063801(37)**
Concealed shower / bath mixer
淋浴 / 浴缸本体组

/100200708**
Rough-in shower / bath valve
淋浴 / 浴缸本体组阀体

⑥ **H8 7648C**
Wall-mounted sliding bar with 3-jet handshower set
3 功能壁挂式升降杆花洒组

37C 0638 C201 C
2-way concealed shower mixer combination
2 功能单把入墙淋浴龙头



D

① **50030114701**
Shower arm with shower head (8")
淋浴龙头花洒组 (8")

② **10020063801(37)**
Concealed shower / bath mixer
淋浴 / 浴缸本体组

/100200708**
Rough-in shower / bath valve
淋浴 / 浴缸本体组阀体

③ **30020041701**
Tub spout
浴缸出水嘴

37C 0638 D201 C
2-way concealed shower / bath mixer combination
2 功能单把入墙淋浴 / 浴缸龙头

2-way concealed shower / bath mixer
2 功能淋浴 / 浴缸本体组

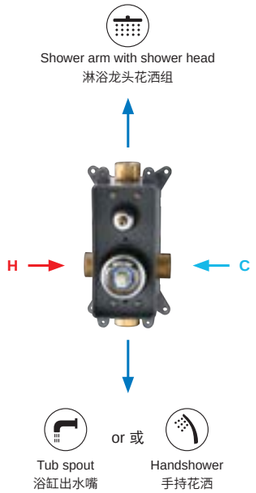

100200679(G1/2)(Φ45)**
100200708(G1/2)(Φ48)**
Rough-in shower / bath valve
淋浴 / 浴缸本体组阀体

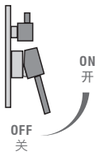

ON / OFF
开 / 关

Lift handle to turn water on and adjust water volume.
提起手柄开启并调节水量。

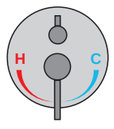

TEMPERATURE ADJUSTMENT
温度调节

Rotate handle counterclockwise for cold water.
Rotate handle clockwise for hot water.
逆时针旋转手柄调节冷水。
顺时针旋转手柄调节热水温度。

100200679(Φ45)**
适用以下产品　Rough-in shower valve is available for products



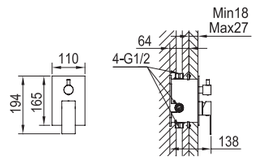

10020088801(75)
Concealed shower / bath mixer
淋浴 / 浴缸本体组

100200708(Φ48)**
适用以下产品　Rough-in shower valve is available for products



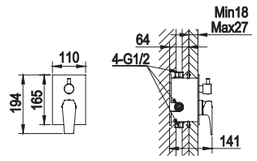

10020255701(34)
Concealed shower / bath mixer
淋浴 / 浴缸本体组



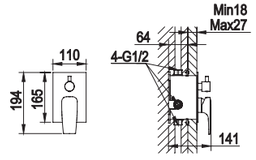

10020255801(65)
Concealed shower / bath mixer
淋浴 / 浴缸本体组



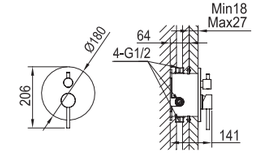

10020063801(37)
Concealed shower / bath mixer
淋浴 / 浴缸本体组

2-way concealed shower / bath mixer combination technical parameter
2 功能单把入墙淋浴 / 浴缸龙头技术参数

• Mounting 安装	Connections: G1/2 Included 连接件：包括 G1/2
• Material 材料	Body: Brass 主体：黄铜 Handle: Zinc alloy 手柄：锌合金
• Cartridge 阀芯	Type: Ceramic 类型：陶瓷 Size: 40mm 尺寸：40mm

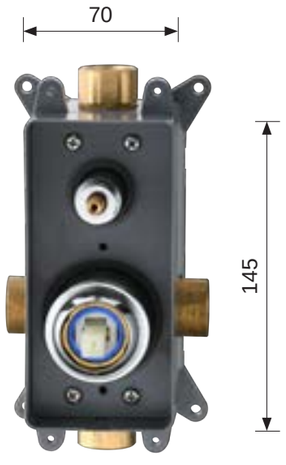

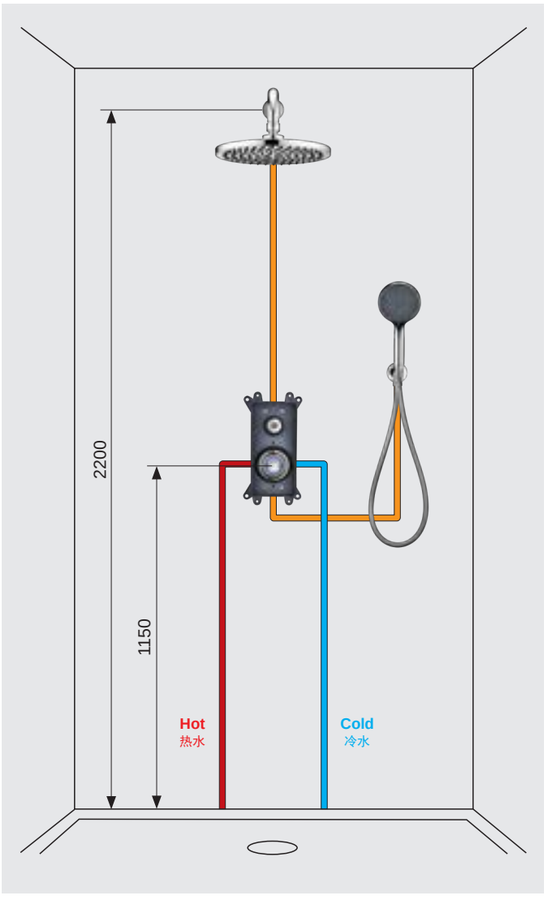

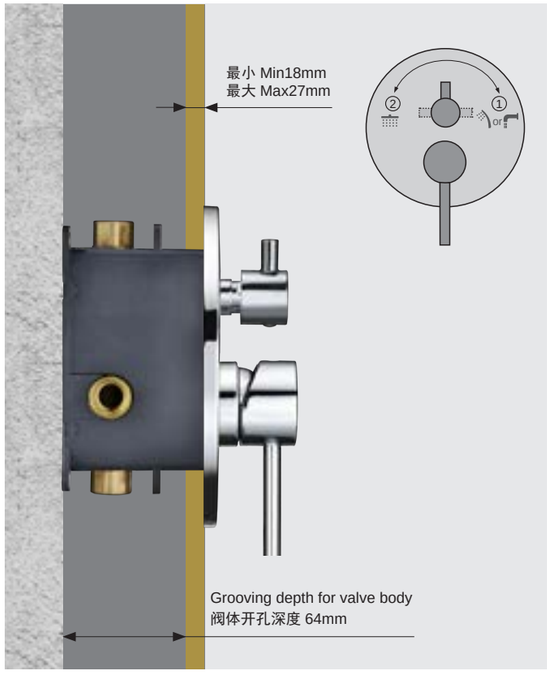

2-way concealed shower / bath mixer combination
2 功能单把入墙淋浴 / 浴缸龙头

2-way concealed shower / bath mixer combination
2 功能单把入墙淋浴 / 浴缸龙头

A



75C 0644 A201 C
2-way concealed shower mixer combination
2 功能单把入墙淋浴龙头

B

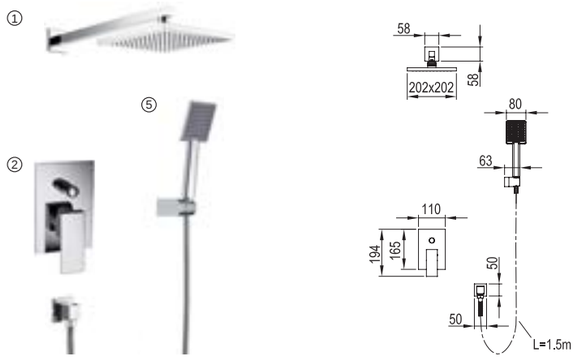

75C 0644 B201 C
2-way concealed shower mixer combination
2 功能单把入墙淋浴龙头

① **50030224501**
Shower arm with shower head (8")
淋浴龙头花洒组 (8")

② **10020064401(75)**
Concealed shower / bath mixer
淋浴 / 浴缸本体组

/100200675**
Rough-in shower / bath valve
淋浴 / 浴缸本体组阀体

⑤ **50030244601**
Wall-mounted handshower set
壁挂式手握花洒组

C

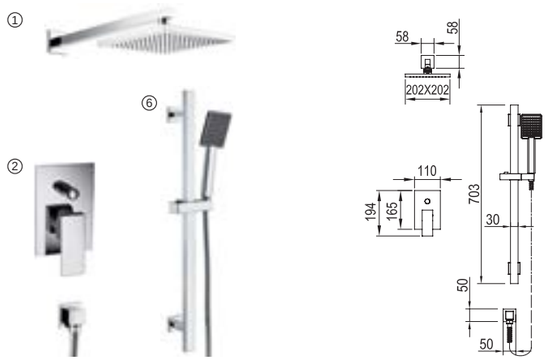

75C 0644 C202 C
2-way concealed shower mixer combination
2 功能单把入墙淋浴龙头

① **50030224501**
Shower arm with shower head (8")
淋浴龙头花洒组 (8")

② **10020064401(75)**
Concealed shower / bath mixer
淋浴 / 浴缸本体组

/100200675**
Rough-in shower / bath valve
淋浴 / 浴缸本体组阀体

⑥ **H8 7699C**
Wall-mounted sliding bar with handshower set
壁挂式升降杆花洒组

D

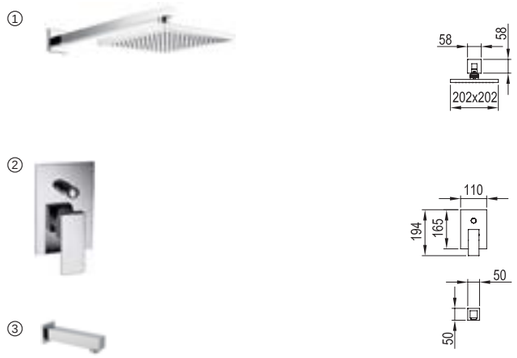

75C 0644 D201 C
2-way concealed shower / bath mixer combination
2 功能单把入墙淋浴 / 浴缸龙头

① **50030224501**
Shower arm with shower head (8")
淋浴龙头花洒组 (8")

② **10020064401(75)**
Concealed shower / bath mixer
淋浴 / 浴缸本体组

/100200675**
Rough-in shower / bath valve
淋浴 / 浴缸本体组阀体

③ **30020041801**
Tub spout
浴缸出水嘴

E

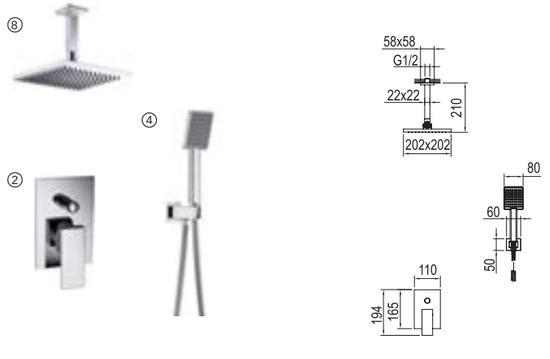

75C 0644 E201 C
2-way concealed shower mixer combination
2 功能单把入墙淋浴龙头

⑧ **50030269701**
Ceiling shower arm with shower head (8")
顶置式花洒组 (8")

② **10020064401(75)**
Concealed shower / bath mixer
淋浴 / 浴缸本体组

/100200675**
Rough-in shower / bath valve
淋浴 / 浴缸本体组阀体

④ **50030249101**
Wall-mounted handshower set
入墙式手握花洒组

2-way concealed shower / bath mixer combination

2 功能单把入墙淋浴 / 浴缸龙头

2-way concealed shower / bath mixer combination
2 功能单把入墙淋浴 / 浴缸龙头

B



37C 2561 B201 C
2-way concealed shower mixer combination
2 功能单把入墙淋浴龙头

A

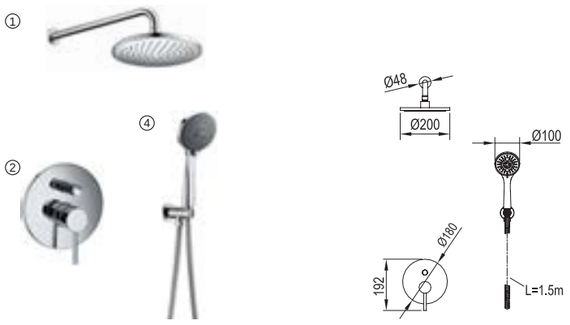

37C 2561 A201 C
2-way concealed shower mixer combination
2 功能单把入墙淋浴龙头

① **50030114701**
Shower arm with shower head (8")
淋浴龙头花洒组 (8")

② **10020256101(37)**
Concealed shower / bath mixer
淋浴 / 浴缸本体组

/100200709**
Rough-in shower / bath valve
淋浴 / 浴缸本体组阀体

④ **50030248601**
Wall-mounted 3-jet handshower set
3 功能入墙式手握花洒组

C



37C 2561 C201 C
2-way concealed shower mixer combination
2 功能单把入墙淋浴龙头

① **50030114701**
Shower arm with shower head (8")
淋浴龙头花洒组 (8")

② **10020256101(37)**
Concealed shower / bath mixer
淋浴 / 浴缸本体组

/100200709**
Rough-in shower / bath valve
淋浴 / 浴缸本体组阀体

⑥ **H8 7648C**
Wall-mounted sliding bar with 3-jet handshower set
3 功能壁挂式升降杆花洒组

D

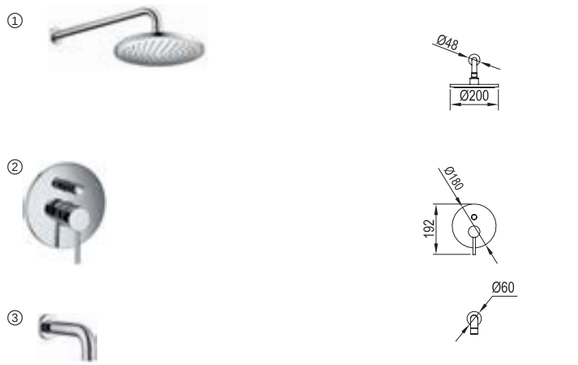

37C 2561 D201 C
2-way concealed shower mixer combination
2 功能单把入墙淋浴龙头

① **50030114701**
Shower arm with shower head (8")
淋浴龙头花洒组 (8")

② **10020256101(37)**
Concealed shower / bath mixer
淋浴 / 浴缸本体组

/100200709**
Rough-in shower / bath valve
淋浴 / 浴缸本体组阀体

③ **30020041701**
Tub spout
浴缸出水嘴

E

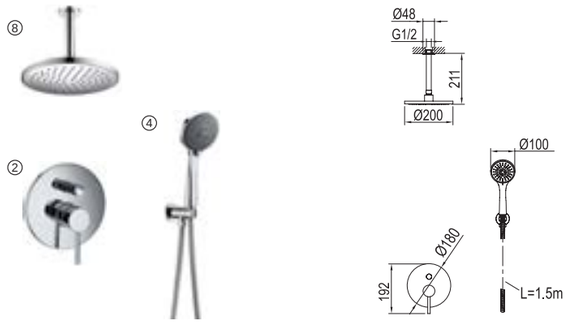

37C 2561 E201 C
2-way concealed shower mixer combination
2 功能单把入墙淋浴龙头

⑧ **50030269801**
Ceiling shower arm with shower head (8")
顶置式花洒组 (8")

② **10020256101(37)**
Concealed shower / bath mixer
淋浴 / 浴缸本体组

/100200709**
Rough-in shower / bath valve
淋浴 / 浴缸本体组阀体

④ **50030248601**
Wall-mounted 3-jet handshower set
3 功能入墙式手握花洒组

2-way concealed shower / bath mixer combination
2 功能单把入墙淋浴 / 浴缸龙头

2-way concealed shower / bath mixer combination
2 功能单把入墙淋浴 / 浴缸龙头



34C 0996 A201 C
2-way concealed shower mixer combination
2 功能单把入墙淋浴龙头



34C 0996 B201 C
2-way concealed shower mixer combination
2 功能单把入墙淋浴龙头

B

① **50030224501**
Shower arm with shower head (8")
淋浴龙头花洒组 (8")

② **10020099601(75)**
Concealed shower / bath mixer
淋浴 / 浴缸本体组

/100200679**
Rough-in shower / bath valve
淋浴 / 浴缸本体组阀体

⑤ **50030244601**
Wall-mounted handshower set
壁挂式手握花洒组



34C 0996 C202 C
2-way concealed shower mixer combination
2 功能单把入墙淋浴龙头

C

① **50030224501**
Shower arm with shower head (8")
淋浴龙头花洒组 (8")

② **10020099601(75)**
Concealed shower / bath mixer
淋浴 / 浴缸本体组

/100200679**
Rough-in shower / bath valve
淋浴 / 浴缸本体组阀体

⑥ **H8 7699C**
Wall-mounted sliding bar with handshower set
壁挂式升降杆花洒组

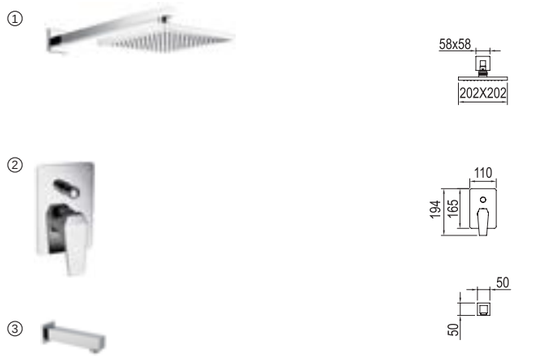

34C 0996 D201 C
2-way concealed shower / bath mixer combination
2 功能单把入墙淋浴 / 浴缸龙头

D

① **50030224501**
Shower arm with shower head (8")
淋浴龙头花洒组 (8")

② **10020099601(75)**
Concealed shower / bath mixer
淋浴 / 浴缸本体组

/100200679**
Rough-in shower / bath valve
淋浴 / 浴缸本体组阀体

③ **30020041801**
Tub spout
浴缸出水嘴

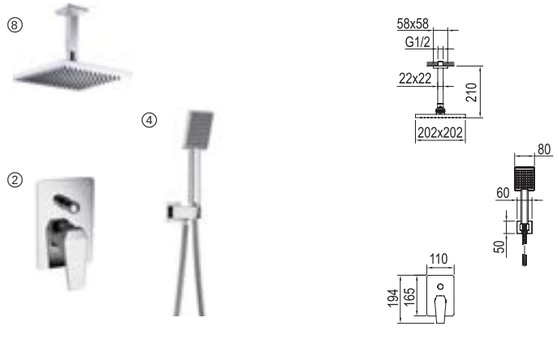

34C 0996 E201 C
2-way concealed shower mixer combination
2 功能单把入墙淋浴龙头

E

⑧ **50030269701**
Ceiling shower arm with shower head (8")
顶置式花洒组 (8")

② **10020099601(75)**
Concealed shower / bath mixer
淋浴 / 浴缸本体组

/100200679**
Rough-in shower / bath valve
淋浴 / 浴缸本体组阀体

④ **50030249101**
Wall-mounted handshower set
入墙式手握花洒组

2-way concealed shower / bath mixer
2 功能淋浴 / 浴缸本体组

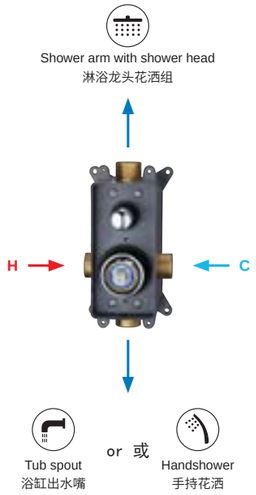

100200675(G1/2)(Φ45)**
100200709(G1/2)(Φ48)**
Rough-in shower / bath valve
淋浴 / 浴缸本体组阀体

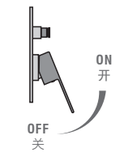

ON / OFF
开 / 关

Lift handle to turn water on and adjust water volume.
提起手柄开启并调节水量。

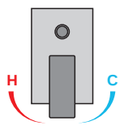

TEMPERATURE ADJUSTMENT
温度调节

Rotate handle counterclockwise for cold water.
Rotate handle clockwise for hot water.
逆时针旋转手柄调节冷水。
顺时针旋转手柄调节热水温度。

100200675(Φ45)**
适用以下产品　Rough-in shower valve is available for products

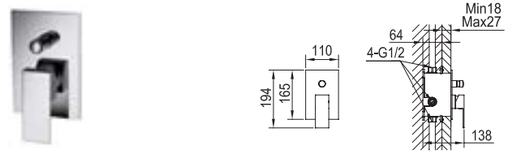

10020064401(75)
Concealed shower / bath mixer
淋浴 / 浴缸本体组

100200709(Φ48)**
适用以下产品　Rough-in shower valve is available for products

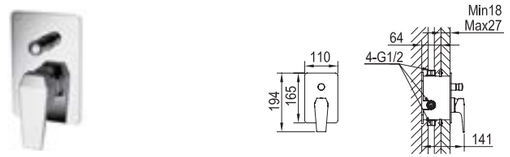

10020099601(34)
Concealed shower / bath mixer
淋浴 / 浴缸本体组

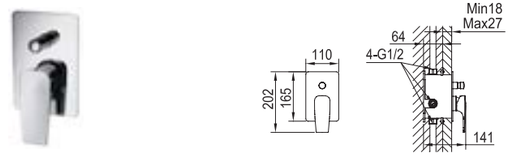

10020157201(65)
Concealed shower / bath mixer
淋浴 / 浴缸本体组

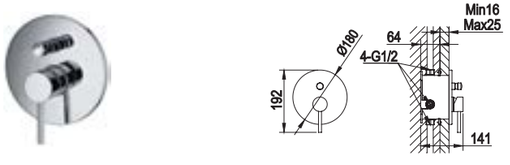

10020256101(37)
Concealed shower / bath mixer
淋浴 / 浴缸本体组

2-way concealed shower / bath mixer combination technical parameter
2 功能单把入墙淋浴 / 浴缸龙头技术参数

• Mounting 安装	Connections: G1/2 Included 连接件：包括 G1/2
• Material 材料	Body: Brass 主体：黄铜 Handle: Zinc alloy 手柄：锌合金
• Cartridge 阀芯	Type: Ceramic 类型：陶瓷 Size: 40mm 尺寸：40mm

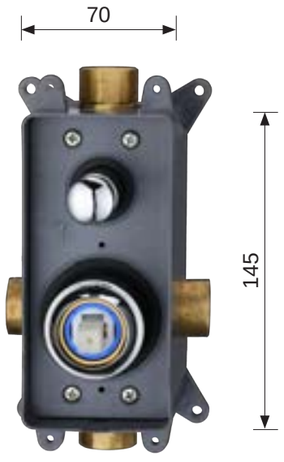

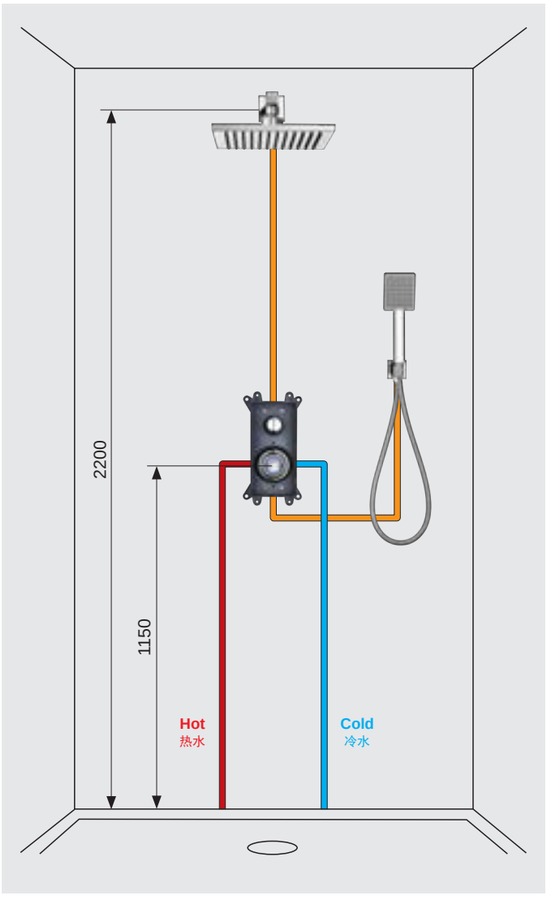

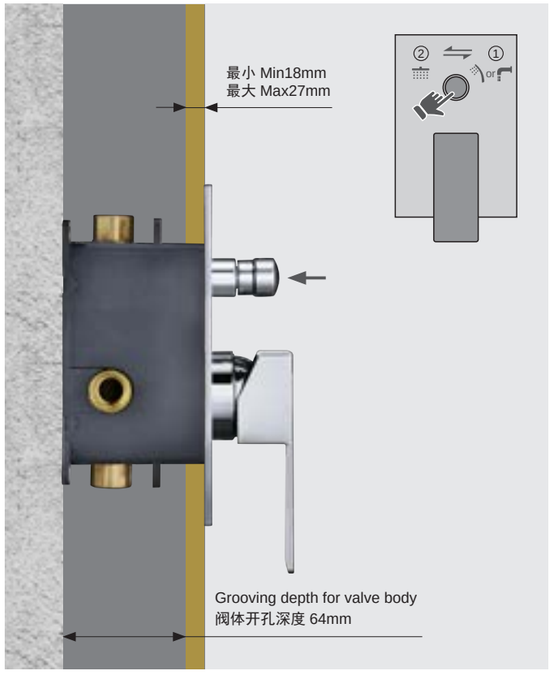

2-way concealed shower / bath mixer combination
2 功能单把入墙淋浴 / 浴缸龙头

2-way concealed shower mixer combination technical parameter
2 功能单把入墙淋浴龙头技术参数

• Mounting 安装	Connections: G1/2 Included 连接件：包括 G1/2
• Material 材料	Body: Brass 主体：黄铜 Handle: Zinc alloy 手柄：锌合金
• Cartridge 阀芯	Type: Ceramic 类型：陶瓷 Size: 40mm 尺寸：40mm

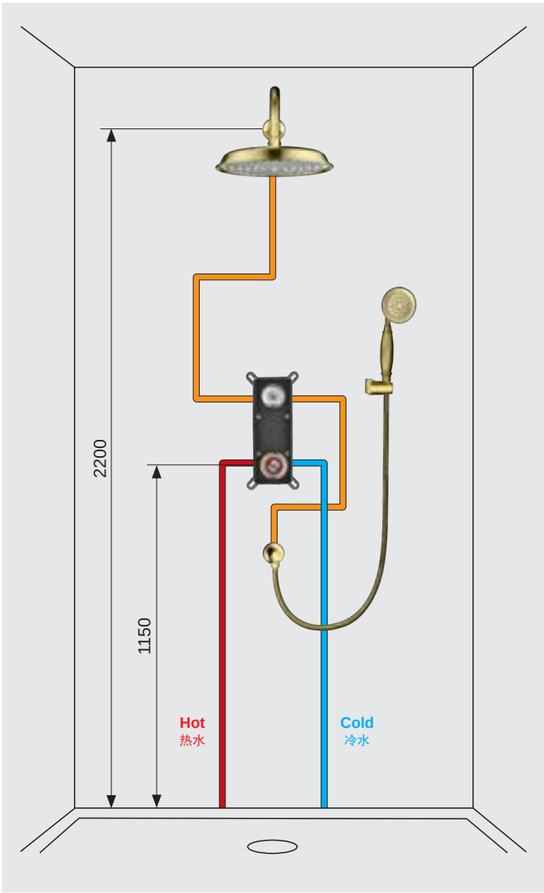

2-way concealed shower mixer
2 功能淋浴本体组

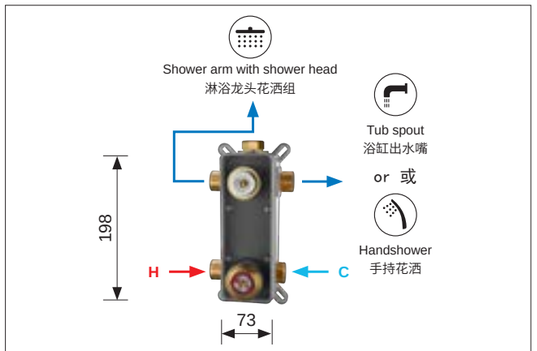

10020250400(G1/2)
Rough-in shower/bath valve
淋浴 / 浴缸本体组阀体

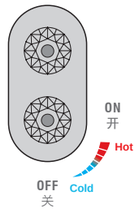

ON / OFF
开 / 关

Rotate handle counterclockwise to turn water on.
逆时针旋转手柄打开水。

TEMPERATURE ADJUSTMENT
温度调节

Rotate handle counterclockwise to cycle from cold to hot water.
逆时针旋转手柄，从冷水逐渐到热水。



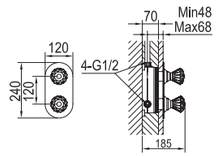

10020250305(09)
Concealed shower/bath mixer
淋浴 / 浴缸本体组

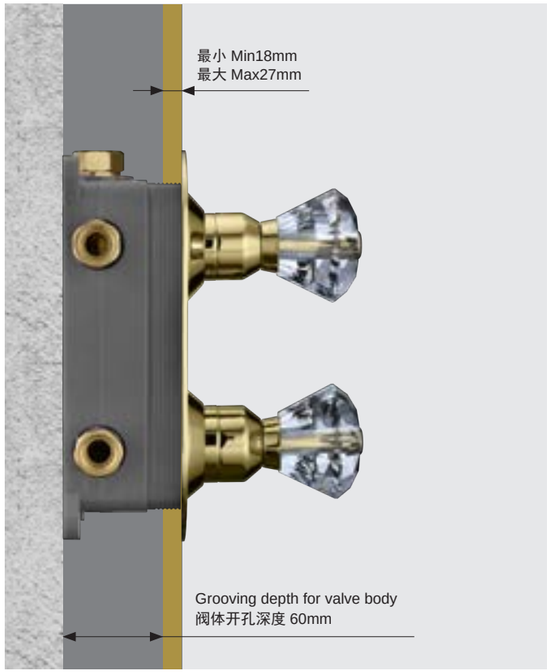

2-way concealed shower / bath mixer combination
2 功能单把入墙淋浴 / 浴缸龙头



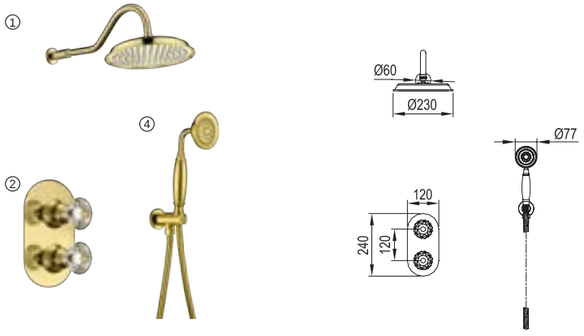

09C 2503 A201 G
2-way concealed shower / bath mixer combination
2 功能入墙淋浴 / 浴缸龙头

A

① **50030280305**
Shower arm with 8" shower head
淋浴龙头花洒组 (8")

② **10020250305(09)**
Concealed shower /bath mixer
淋浴 / 浴缸本体组

/10020250400
Rough-in shower /bath valve
淋浴 / 浴缸本体组阀体

④ **50030277005**
Wall-mounted handshower set
入墙式手握花洒组

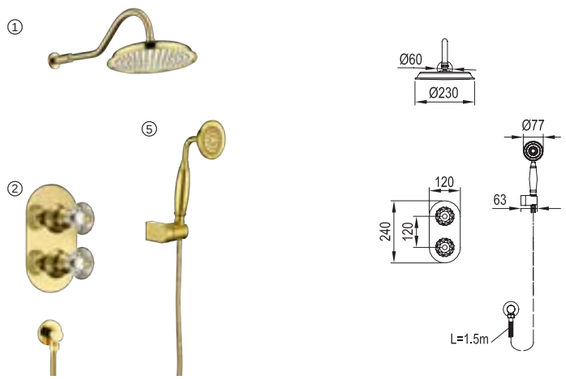

09C 2503 B201 G
2-way concealed shower mixer combination
2 功能单把入墙淋浴龙头

B

① **50030280305**
Shower arm with 8" shower head
淋浴龙头花洒组 (8")

② **10020250305(09)**
Concealed shower /bath mixer
淋浴 / 浴缸本体组

/10020250400
Rough-in shower /bath valve
淋浴 / 浴缸本体组阀体

⑤ **50030276905**
Wall-mounted handshower set
壁挂式手握花洒组

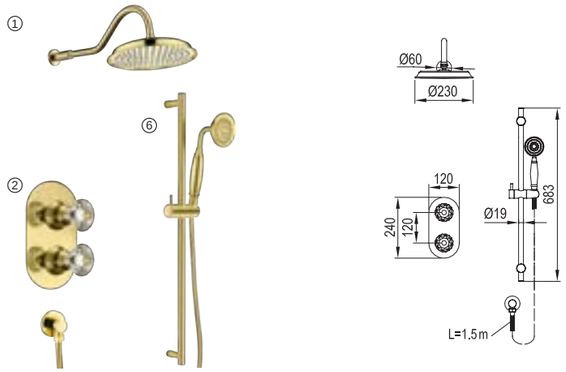

09C 2503 C201 G
2-way concealed shower mixer combination
2 功能单把入墙淋浴龙头

C

① **50030280305**
Shower arm with 8" shower head
淋浴龙头花洒组 (8")

② **10020250305(09)**
Concealed shower /bath mixer
淋浴 / 浴缸本体组

/10020250400
Rough-in shower /bath valve
淋浴 / 浴缸本体组阀体

⑥ **H8 7670G**
wall-mounted sliding bar with handshower set
壁挂式升降杆花洒组

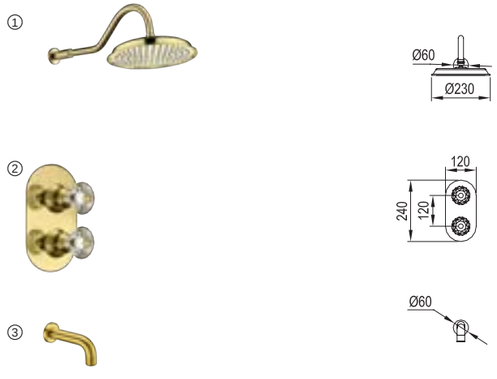

09C 2503 D201 G
2-way concealed shower / bath mixer combination
2 功能入墙淋浴 / 浴缸龙头

D

① **50030280305**
Shower arm with 8" shower head
淋浴龙头花洒组 (8")

② **10020250305(09)**
Concealed shower /bath mixer
淋浴 / 浴缸本体组

/10020250400
Rough-in shower /bath valve
淋浴 / 浴缸本体组阀体

③ **30020041705**
Tub spout
浴缸出水嘴

3-WAY CONCEALED SHOWER / BATH MIXER COMBINATION

3 功能单把入墙淋浴 / 浴缸龙头

3-way concealed shower / bath mixer combination
3 功能单把入墙淋浴 / 浴缸龙头

D



75C 0536 D302 C
3-way concealed shower mixer combination
3 功能单把入墙淋浴龙头

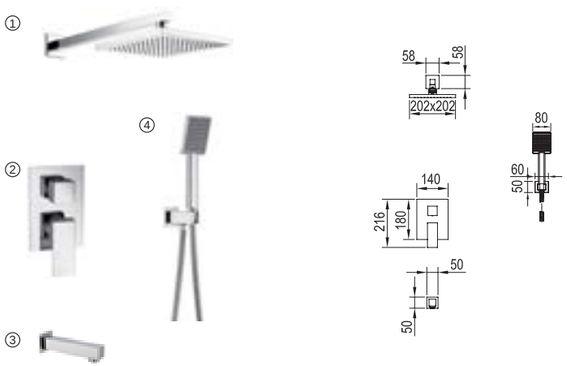

75C 0536 A301 C
3-way concealed shower / bath mixer combination
3 功能单把入墙淋浴 / 浴缸龙头

A

① **50030224501**
Shower arm with shower head (8")
淋浴龙头花洒组 (8")

② **10020053601(75)**
3-way concealed shower / bath mixer
3 功能淋浴 / 浴缸本体组

/100200749**
Rough-in 3-way shower / bath valve
3 功能淋浴 / 浴缸本体组阀体

③ **30020041801**
Tub spout
浴缸出水嘴

④ **50030249101**
Wall-mounted handshower set
入墙式手握花洒组



75C 0536 B301 C
3-way concealed shower / bath mixer combination
3 功能单把入墙淋浴 / 浴缸龙头

B

① **50030224501**
Shower arm with shower head (8")
淋浴龙头花洒组 (8")

② **10020053601(75)**
3-way concealed shower / bath mixer
3 功能淋浴 / 浴缸本体组

/100200749**
Rough-in 3-way shower / bath valve
3 功能淋浴 / 浴缸本体组阀体

③ **30020041801**
Tub spout
浴缸出水嘴

⑤ **50030244601**
Wall-mounted handshower set
壁挂式手握花洒组



75C 0536 C302 C
3-way concealed shower / bath mixer combination
3 功能单把入墙淋浴 / 浴缸龙头

C

① **50030224501**
Shower arm with shower head (8")
淋浴龙头花洒组 (8")

② **10020053601(75)**
3-way concealed shower / bath mixer
3 功能淋浴 / 浴缸本体组

/100200749**
Rough-in 3-way shower / bath valve
3 功能淋浴 / 浴缸本体组阀体

③ **30020041801**
Tub spout
浴缸出水嘴

⑥ **H8 7699C**
Wall-mounted sliding bar with handshower set
壁挂式升降杆花洒组

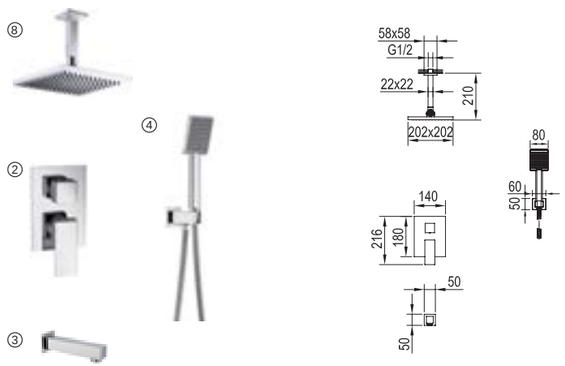

75C 0536 G301 C
3-way concealed shower / bath mixer combination
3 功能单把入墙淋浴 / 浴缸龙头

G

⑧ **50030269701**
Ceiling shower arm with shower head (8")
顶置式花洒组 (8")

② **10020053601(75)**
3-way concealed shower / bath mixer
3 功能淋浴 / 浴缸本体组

/100200749**
Rough-in 3-way shower / bath valve
3 功能淋浴 / 浴缸本体组阀体

③ **30020041801**
Tub spout
浴缸出水嘴

④ **50030249101**
Wall-mounted handshower set
入墙式手握花洒组

3-way concealed shower / bath mixer combination

3 功能单把入墙淋浴 / 浴缸龙头

3-way concealed shower / bath mixer combination
3 功能单把入墙淋浴 / 浴缸龙头

A



37C 0635 A301 C
3-way concealed shower / bath mixer combination
3 功能单把入墙淋浴 / 浴缸龙头

B



37C 0635 B301 C
3-way concealed shower / bath mixer combination
3 功能单把入墙淋浴 / 浴缸龙头

① **50030114701**
Shower arm with shower head (8")
淋浴龙头花洒组 (8")

② **10020063501(37)**
3-way concealed shower / bath mixer
3 功能淋浴 / 浴缸本体组

/100200750**
Rough-in 3-way shower / bath valve
3 功能淋浴 / 浴缸本体组阀体

③ **30020041701**
Tub spout
浴缸出水嘴

⑤ **50030244701**
Wall-mounted 3-jet handshower set
3 功能壁挂式手握花洒组



37C 0635 C301 C
3-way concealed shower / bath mixer combination
3 功能单把入墙淋浴 / 浴缸龙头

C

① **50030114701**
Shower arm with shower head (8")
淋浴龙头花洒组 (8")

② **10020063501(37)**
3-way concealed shower / bath mixer
3 功能淋浴 / 浴缸本体组

/100200750**
Rough-in 3-way shower / bath valve
3 功能淋浴 / 浴缸本体组阀体

③ **30020041701**
Tub spout
浴缸出水嘴

⑥ **H8 7646C**
Wall-mounted sliding bar with 3-jet handshower set
3 功能壁挂式升降杆花洒组



37C 0635 D302 C
3-way concealed shower mixer combination
3 功能单把入墙淋浴龙头

D

① **50030114701**
Shower arm with shower head (8")
淋浴龙头花洒组 (8")

② **10020063501(37)**
3-way concealed shower / bath mixer
3 功能淋浴 / 浴缸本体组

/100200750**
Rough-in 3-way shower / bath valve
3 功能淋浴 / 浴缸本体组阀体

④ **50030248301**
Wall-mounted 3-jet handshower set
3 功能入墙式手握花洒组

⑦ **50030236201**
Body jet
身体花洒

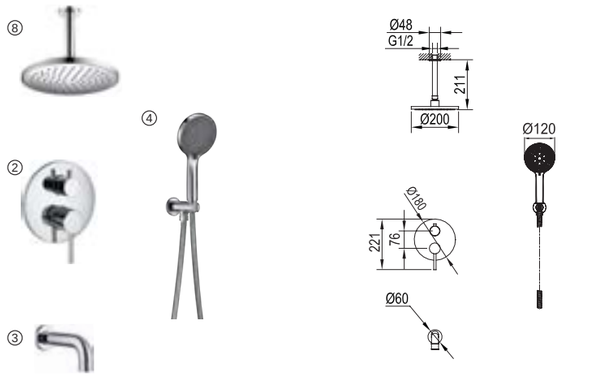

37C 0635 G301 C
3-way concealed shower / bath mixer combination
3 功能单把入墙淋浴 / 浴缸龙头

G

⑧ **50030269801**
Ceiling shower arm with shower head (8")
顶置式花洒组 (8")

② **10020063501(37)**
3-way concealed shower / bath mixer
3 功能淋浴 / 浴缸本体组

/100200750**
Rough-in 3-way shower / bath valve
3 功能淋浴 / 浴缸本体组阀体

③ **30020041701**
Tub spout
浴缸出水嘴

④ **50030248301**
Wall-mounted 3-jet handshower set
3 功能入墙式手握花洒组

3-way concealed shower / bath mixer combination

3 功能单把入墙淋浴 / 浴缸龙头



3-way concealed shower / bath mixer combination
3 功能单把入墙淋浴 / 浴缸龙头

A



65C 2560 A301 C
3-way concealed shower / bath mixer combination
3 功能单把入墙淋浴 / 浴缸龙头

B

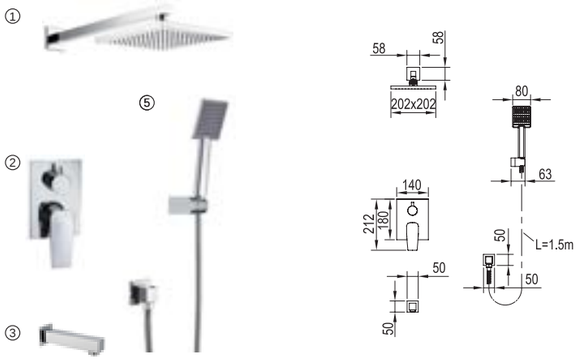

65C 2560 B301 C
3-way concealed shower / bath mixer combination
3 功能单把入墙淋浴 / 浴缸龙头

① **50030224501**
Shower arm with shower head (8")
淋浴龙头花洒组 (8")

② **10020256001(65)**
3-way concealed shower / bath mixer
3 功能淋浴 / 浴缸本体组

/100200750**
Rough-in 3-way shower / bath valve
3 功能淋浴 / 浴缸本体组阀体

③ **30020041801**
Tub spout
浴缸出水嘴

⑤ **50030244601**
Wall-mounted handshower set
壁挂式手握花洒组

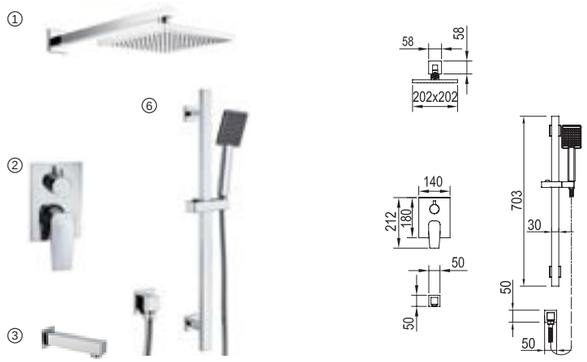

65C 2560 C302 C
3-way concealed shower / bath mixer combination
3 功能单把入墙淋浴 / 浴缸龙头

C

① **50030224501**
Shower arm with shower head (8")
淋浴龙头花洒组 (8")

② **10020256001(65)**
3-way concealed shower / bath mixer
3 功能淋浴 / 浴缸本体组

/100200750**
Rough-in 3-way shower / bath valve
3 功能淋浴 / 浴缸本体组阀体

③ **30020041801**
Tub spout
浴缸出水嘴

⑥ **H8 7699C**
Wall-mounted sliding bar with handshower set
壁挂式升降杆花洒组



65C 2560 D302 C
3-way concealed shower mixer combination
3 功能单把入墙淋浴龙头

D

① **50030224501**
Shower arm with shower head (8")
淋浴龙头花洒组 (8")

② **10020256001(65)**
3-way concealed shower / bath mixer
3 功能淋浴 / 浴缸本体组

/100200750**
Rough-in 3-way shower / bath valve
3 功能淋浴 / 浴缸本体组阀体

④ **50030249101**
Wall-mounted handshower set
入墙式手握花洒组

⑦ **50030174501**
Body jet
身体花洒

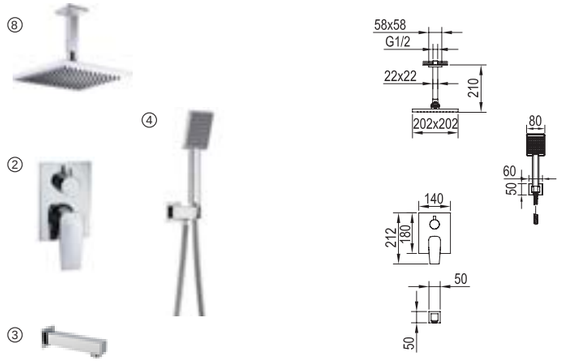

65C 2560 G301 C
3-way concealed shower / bath mixer combination
3 功能单把入墙淋浴 / 浴缸龙头

G

⑧ **50030269701**
Ceiling shower arm with shower head (8")
顶置式花洒组 (8")

② **10020256001(65)**
3-way concealed shower / bath mixer
3 功能淋浴 / 浴缸本体组

/100200750**
Rough-in 3-way shower / bath valve
3 功能淋浴 / 浴缸本体组阀体

③ **30020041801**
Tub spout
浴缸出水嘴

④ **50030249101**
Wall-mounted handshower set
入墙式手握花洒组

3-way concealed shower mixer combination
3 功能单把入墙淋浴龙头

R

⑩

④

②

75C 0536 R301 C
3-way concealed shower mixer combination
3 功能单把入墙淋浴龙头

3-way concealed shower mixer combination
3 功能单把入墙淋浴龙头



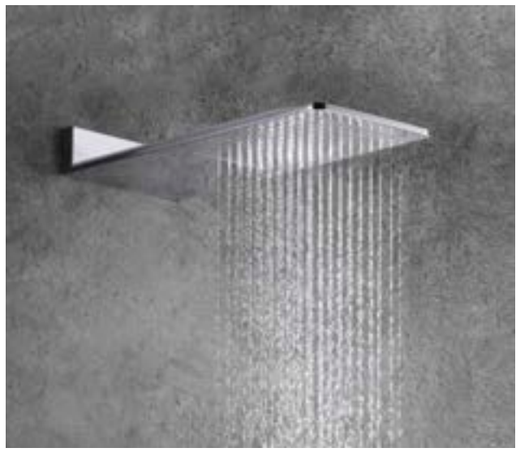





75C 0536 R301 C
3-way concealed shower mixer combination
3 功能单把入墙淋浴龙头

R

⑩ **50030132801**
Dual-function overhead rain shower
2 功能头顶花洒

② **10020053601(75)**
3-way concealed shower / bath mixer
3 功能淋浴 / 浴缸本体组

/100200749**
Rough-in shower / bath valve
3 功能淋浴 / 浴缸本体组阀体

④ **50030249101**
Wall-mounted handshower set
入墙式手握花洒组

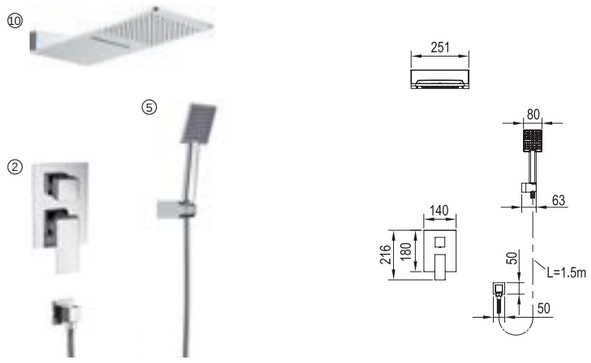

75C 0536 S301 C
3-way concealed shower mixer combination
3 功能单把入墙淋浴龙头

S

⑩ **50030132801**
Dual-function overhead rain shower
2 功能头顶花洒

② **10020053601(75)**
3-way concealed shower / bath mixer
3 功能淋浴 / 浴缸本体组

/100200749**
Rough-in shower / bath valve
3 功能淋浴 / 浴缸本体组阀体

⑤ **50030244601**
Wall-mounted handshower set
壁挂式手握花洒组



75C 0536 T302 C
3-way concealed shower mixer combination
3 功能单把入墙淋浴龙头

T

⑩ **50030132801**
Dual-function overhead rain shower
2 功能头顶花洒

② **10020053601(75)**
3-way concealed shower / bath mixer
3 功能淋浴 / 浴缸本体组

/100200749**
Rough-in shower / bath valve
3 功能淋浴 / 浴缸本体组阀体

⑥ **H8 7699C**
Wall-mounted sliding bar with handshower set
壁挂式升降杆花洒组

3-way concealed shower mixer combination
3 功能单把入墙淋浴龙头











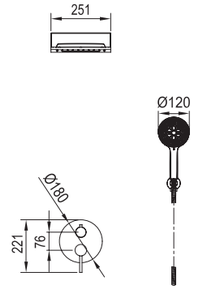

37C 0635 R301 C
3-way concealed shower mixer combination
3 功能单把入墙淋浴龙头

R

⑩ **50030132701**
Dual-function overhead rain shower
2 功能头顶花洒

② **10020063501(37)**
3-way concealed shower / bath mixer
3 功能淋浴 / 浴缸本体组

/100200750**
Rough-in shower / bath valve
3 功能淋浴 / 浴缸本体组阀体

④ **50030248301**
Wall-mounted 3-jet handshower set
3 功能入墙式手握花洒组





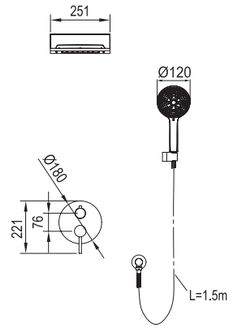

37C 0635 S301 C
3-way concealed shower mixer combination
3 功能单把入墙淋浴龙头

S

⑩ **50030132701**
Dual-function overhead rain shower
2 功能头顶花洒

② **10020063501(37)**
3-way concealed shower / bath mixer
3 功能淋浴 / 浴缸本体组

/100200750**
Rough-in shower / bath valve
3 功能淋浴 / 浴缸本体组阀体

⑤ **50030244701**
Wall-mounted 3-jet handshower set
3 功能壁挂式手握花洒组





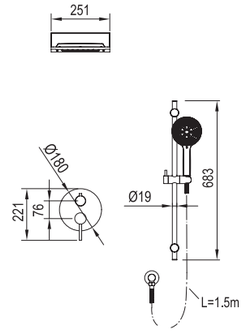

37C 0635 T301 C
3-way concealed shower mixer combination
3 功能单把入墙淋浴龙头

T

⑩ **50030132701**
Dual-function overhead rain shower
2 功能头顶花洒

② **10020063501(37)**
3-way concealed shower / bath mixer
3 功能淋浴 / 浴缸本体组

/100200750**
Rough-in shower / bath valve
3 功能淋浴 / 浴缸本体组阀体

⑥ **H8 7646C**
Wall-mounted sliding bar with 3-jet handshower set
3 功能壁挂式升降杆花洒组

3-way concealed shower / bath mixer
3 功能淋浴 / 浴缸本体组

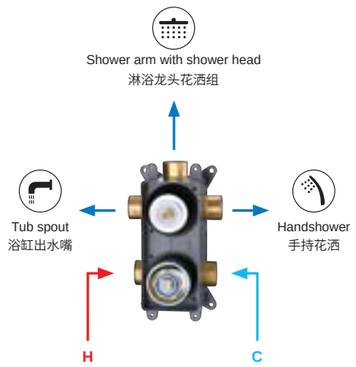

100200749(G1/2)(Φ45)**
100200750(G1/2)(Φ48)**
Rough-in 3-way shower / bath valve
3 功能淋浴 / 浴缸本体组阀体

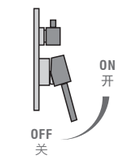

ON / OFF
开 / 关

Lift handle to turn water on and adjust water volume.
提起手柄开启并调节水量。

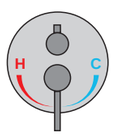

TEMPERATURE ADJUSTMENT
温度调节

Rotate handle counterclockwise for cold water.
Rotate handle clockwise for hot water.
逆时针旋转手柄调节冷水。
顺时针旋转手柄调节热水温度。

100200749(Φ45)**
适用以下产品　Rough-in shower valve is available for products



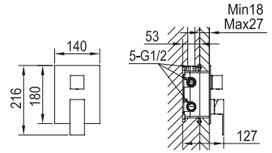

10020053601(75)
3-way concealed shower / bath mixer
3 功能淋浴 / 浴缸本体组

100200750(Φ48)**
适用以下产品　Rough-in shower valve is available for products



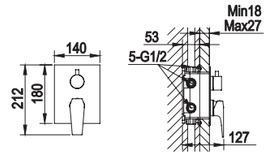

10020255901(34)
3-way concealed shower / bath mixer
3 功能淋浴 / 浴缸本体组



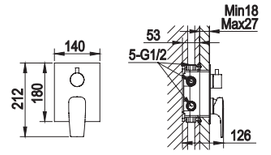

10020256001(65)
3-way concealed shower / bath mixer
3 功能淋浴 / 浴缸本体组



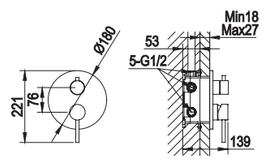

10020063501(37)
3-way concealed shower / bath mixer
3 功能淋浴 / 浴缸本体组

3-way concealed shower / bath mixer combination technical parameter
3 功能单把入墙淋浴 / 浴缸龙头技术参数

• Mounting 安装	Connections: G1/2 Included 连接件：包括 G1/2
• Material 材料	Body: Brass 主体：黄铜 Handle: Zinc alloy 手柄：锌合金
• Cartridge 阀芯	Type: Ceramic 类型：陶瓷 Size: 40mm 尺寸：40mm

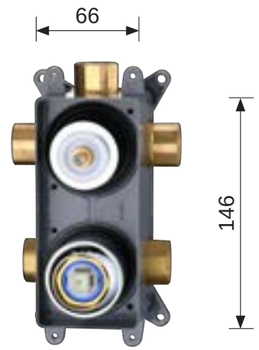

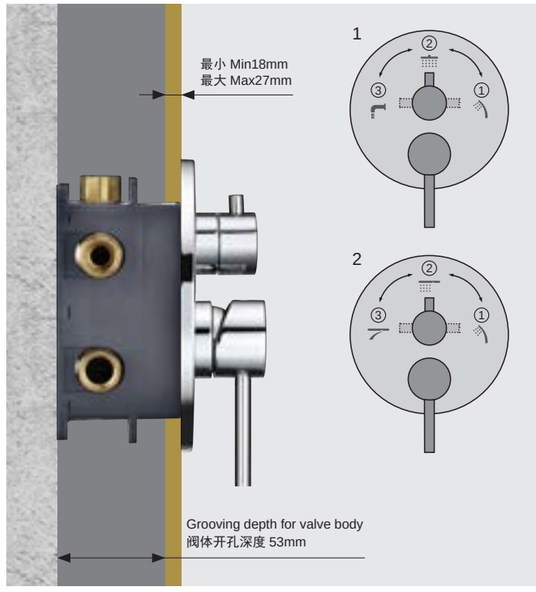

1

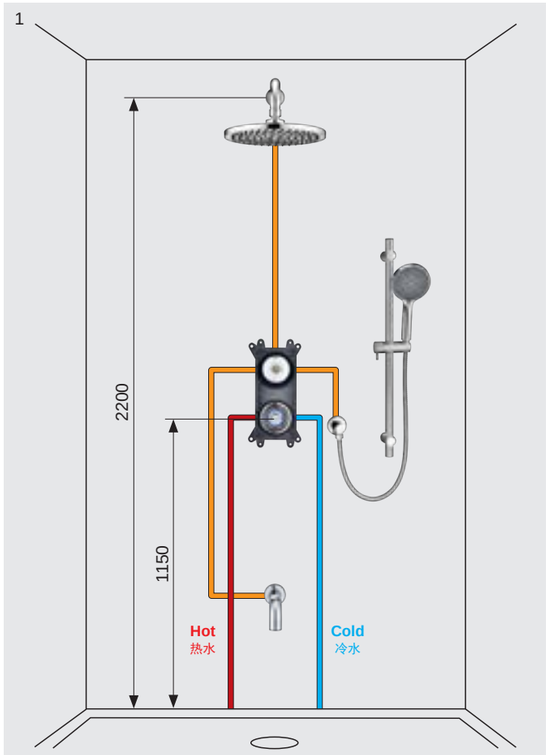

2

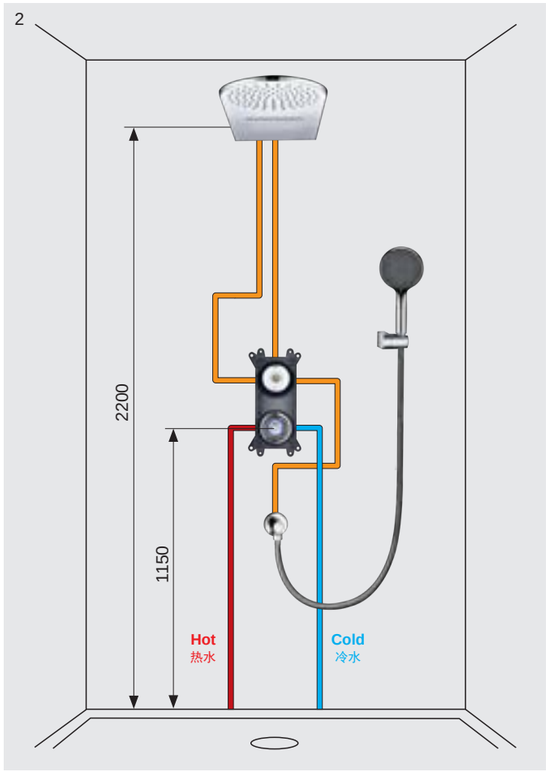

3-way concealed shower / bath mixer combination
3 功能单把入墙淋浴 / 浴缸龙头



3-way Concealed shower / bath mixer combination technical parameter
3 功能单把入墙淋浴 / 浴缸龙头技术参数

• Mounting 安装	Connections: G1/2 Included 连接件：包括 G1/2
• Material 材料	Body: Brass 主体：黄铜 Handle: Zinc alloy 手柄：锌合金
• Cartridge 阀芯	Type: Ceramic 类型：陶瓷 Size: 40mm 尺寸：40mm

3-way concealed shower / bath mixer
3 功能淋浴 / 浴缸本体组

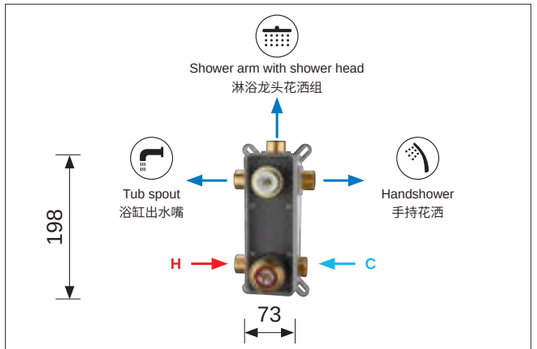

10020250600(G1/2)
Rough-in 3-way shower/bath valve
3 功能淋浴 / 浴缸本体组阀体

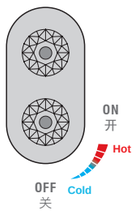

ON / OFF
开 / 关
Rotate handle counterclockwise to turn water on.
逆时针旋转手柄打开水。

TEMPERATURE ADJUSTMENT
温度调节
Rotate handle counterclockwise to cycle from cold to hot water.
逆时针旋转手柄，从冷水逐渐到热水。



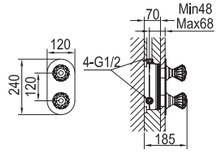

10020250305(09)
Concealed shower/bath mixer
淋浴 / 浴缸本体组

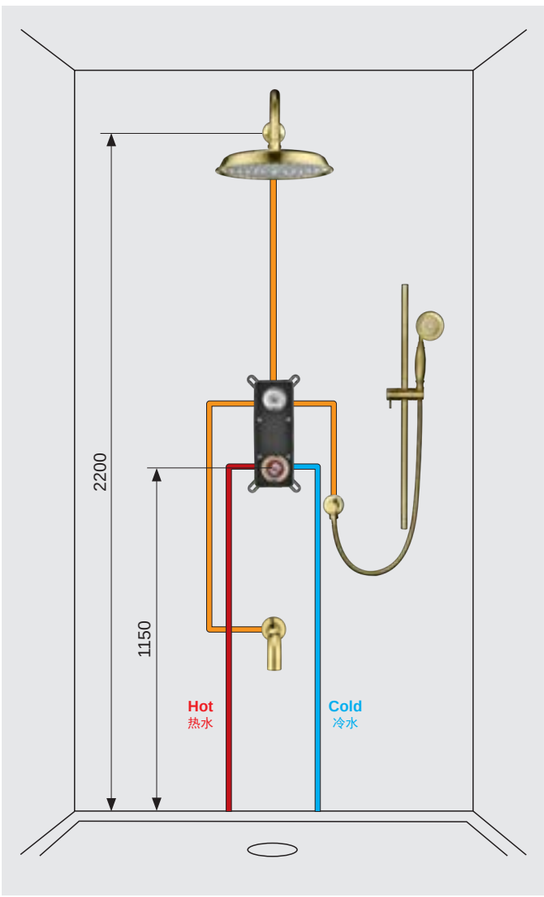

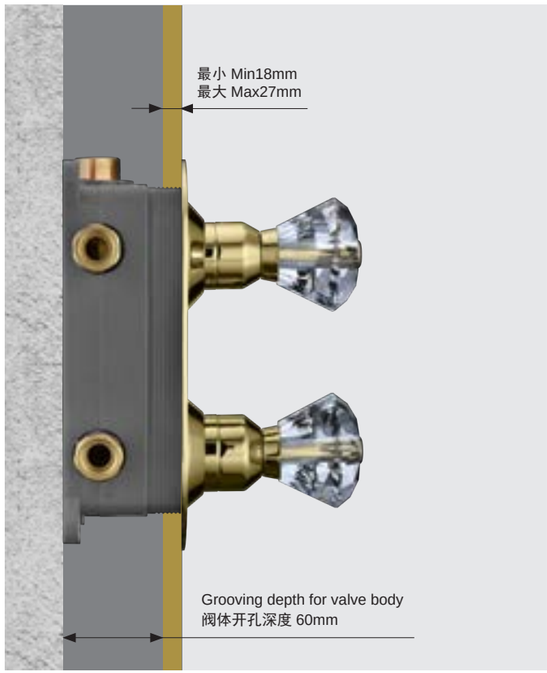

3-way concealed shower / bath mixer combination
3 功能单把入墙淋浴 / 浴缸龙头



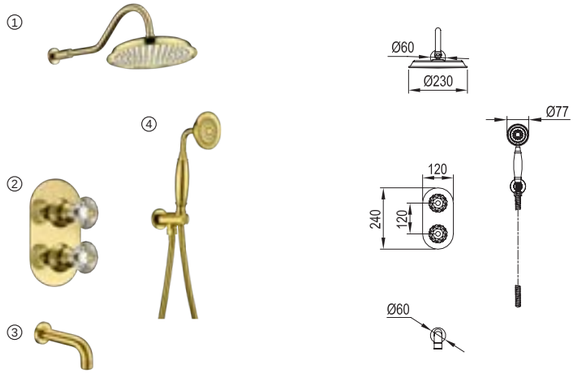

09C 2505 A301 G
3-way concealed shower / bath mixer combination
3 功能入墙淋浴 / 浴缸龙头

A

① **50030280305**
Shower arm with 8" shower head
淋浴龙头花洒组 (8")

② **10020250505(09)**
3-way concealed shower / bath mixer
3 功能淋浴 / 浴缸本体组

/10020250600
Rough-in 3-way shower / bath valve
3 功能淋浴 / 浴缸本体组阀体

③ **30020041705**
Tub spout
浴缸出水嘴

④ **50030277005**
Wall-mounted handshower set
入墙式手握花洒组

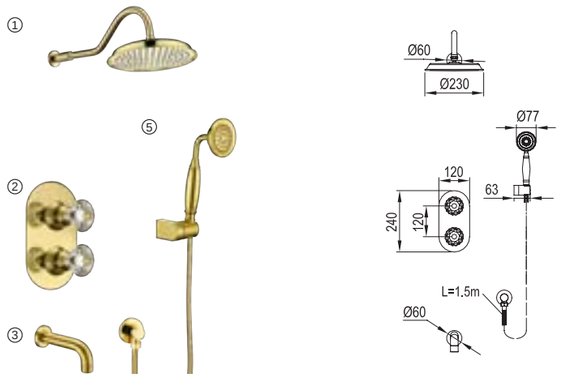

09C 2505 B301 G
3-way concealed shower / bath mixer combination
3 功能入墙淋浴 / 浴缸龙头

B

① **50030280305**
Shower arm with 8" shower head
淋浴龙头花洒组 (8")

② **10020250505(09)**
3-way concealed shower / bath mixer
3 功能淋浴 / 浴缸本体组

/10020250600
Rough-in 3-way shower / bath valve
3 功能淋浴 / 浴缸本体组阀体

③ **30020041705**
Tub spout
浴缸出水嘴

⑤ **50030276905**
Wall-mounted handshower set
壁挂式手握花洒组

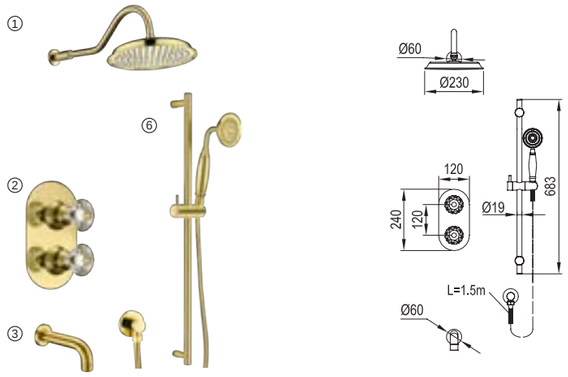

09C 2505 C301 G
3-way concealed shower / bath mixer combination
3 功能入墙淋浴 / 浴缸龙头

C

① **50030280305**
Shower arm with 8" shower head
淋浴龙头花洒组 (8")

② **10020250505(09)**
3-way concealed shower / bath mixer
3 功能淋浴 / 浴缸本体组

/10020250600
Rough-in 3-way shower / bath valve
3 功能淋浴 / 浴缸本体组阀体

③ **30020041705**
Tub spout
浴缸出水嘴

⑥ **H8 7670G**
wall-mounted sliding bar with handshower set
壁挂式升降杆花洒组

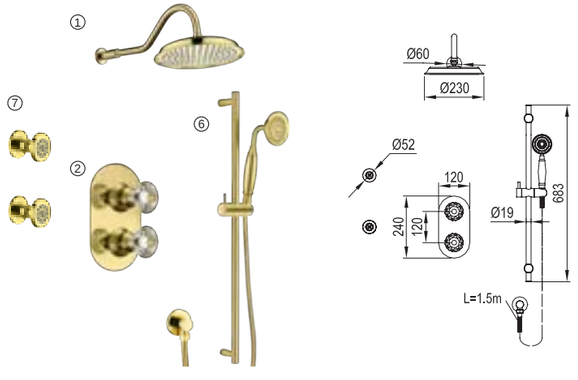

09C 2505 F302 G
3-way concealed shower mixer combination
3 功能入墙淋浴龙头

F

① **50030280305**
Shower arm with 8" shower head
淋浴龙头花洒组 (8")

② **10020250505(09)**
3-way concealed shower / bath mixer
3 功能淋浴 / 浴缸本体组

/10020250600
Rough-in 3-way shower / bath valve
3 功能淋浴 / 浴缸本体组阀体

⑥ **H8 7670G**
wall-mounted sliding bar with handshower set
壁挂式升降杆花洒组

⑦ **50030236205**
Body jet
身体花洒

2-WAY CONCEALED SHOWER / BATH MIXER (HORIZONTAL TYPE)

2 功能单把入墙淋浴 / 浴缸龙头 (横式)

2-way concealed shower / bath mixer combination (Horizontal type)
2 功能单把入墙淋浴 / 浴缸龙头（横式）





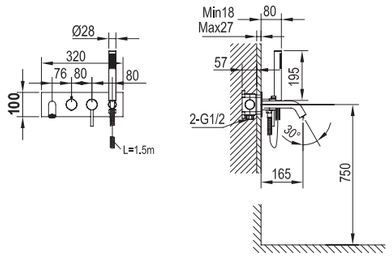

37C 2322 V201 C
2-way concealed shower / bath mixer combination
(Horizontal type)
2 功能单把入墙淋浴 / 浴缸龙头（横式）



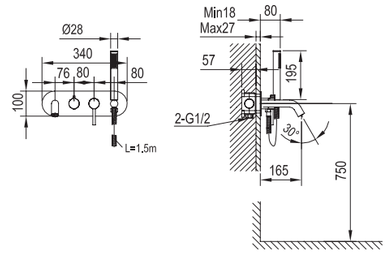

37C 2854 V201C
2-way concealed shower / bath mixer combination
(Horizontal type)
2 功能单把入墙淋浴 / 浴缸龙头（横式）



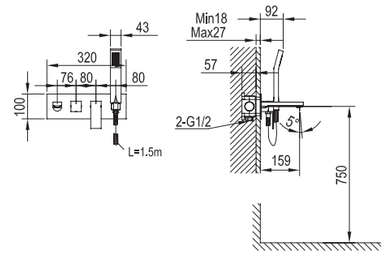

75C 2325 V201C
2-way concealed shower / bath mixer combination
(Horizontal type)
2 功能单把入墙淋浴 / 浴缸龙头（横式）

2-way concealed shower / bath mixer (Horizontal type)

2 功能淋浴 / 浴缸本体组（横式）

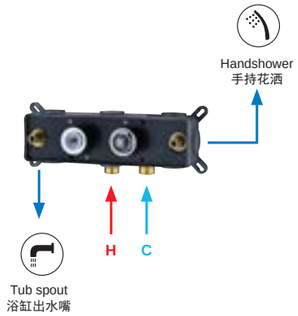

100202513(G1/2)**

Rough-in shower / bath valve

淋浴 / 浴缸本体组阀体

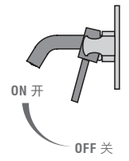

ON / OFF

开 / 关

Lift handle to turn water on and adjust water volume.

提起手柄开启并调节水量。

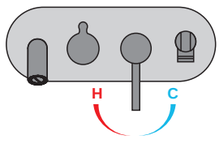

TEMPERATURE ADJUSTMENT

温度调节

Rotate handle counterclockwise for cold water.

Rotate handle clockwise for hot water.

逆时针旋转手柄调节冷水。

顺时针旋转手柄调节热水温度。



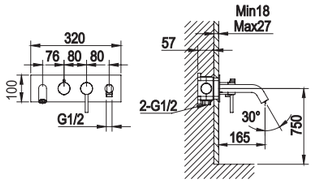

10020232201(37)

Concealed shower / bath mixer

淋浴 / 浴缸本体组



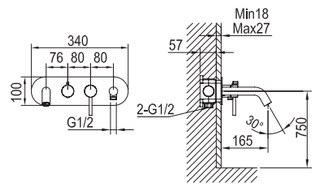

10020285401(37)

Concealed shower / bath mixer

淋浴 / 浴缸本体组



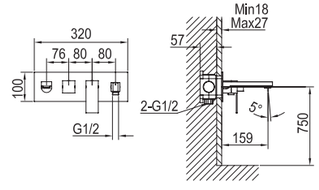

10020232501(75)

Concealed shower / bath mixer

淋浴 / 浴缸本体组

2-way concealed shower / bath mixer (Horizontal type) technical parameter

2 功能淋浴 / 浴缸本体组（横式）– 技术参数

• Mounting 安装	Connections: G1/2 Included 连接件：包括 G1/2
• Material 材料	Body: Brass 主体：黄铜 Handle: Zinc alloy 手柄：锌合金
• Cartridge 阀芯	Type: Ceramic 类型：陶瓷 Size: 35mm 尺寸：35mm



100202513(G1/2)**

Rough-in shower / bath valve

淋浴 / 浴缸本体组阀体

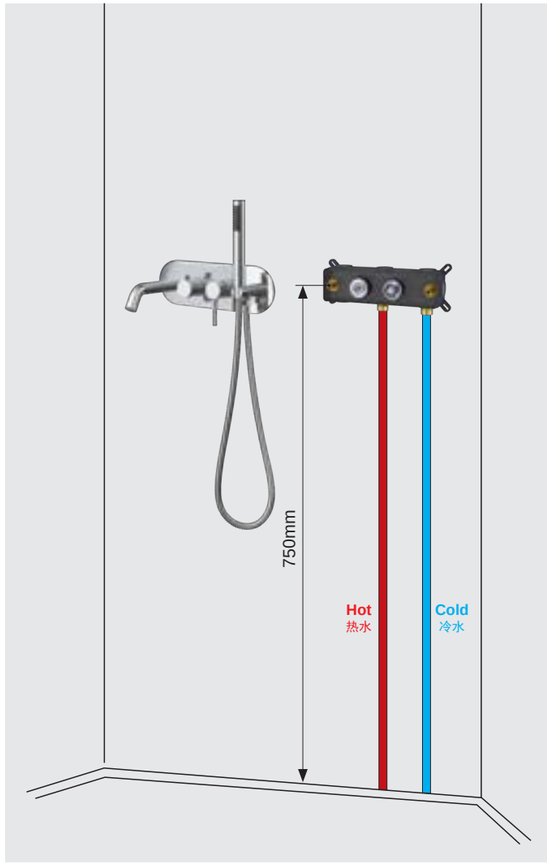



2-WAY CONCEALED SHOWER MIXER (HORIZONTAL TYPE)

2 功能单把入墙淋浴龙头（横式）

2-way concealed shower mixer combination (Horizontal type)

2 功能单把入墙淋浴龙头（横式）





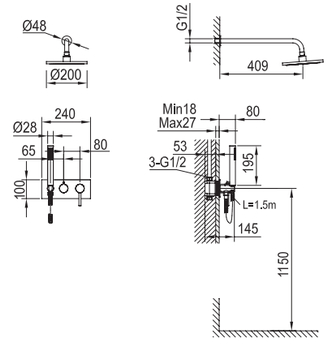

37C 2323 W201 C

2-way concealed shower mixer combination

2 功能单把入墙淋浴龙头



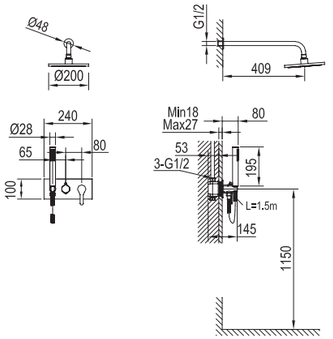

111C 2326 W202 C

2-way concealed shower mixer combination

2 功能单把入墙淋浴龙头





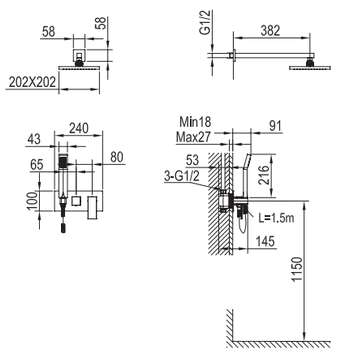

75C 2579 W201 C

2-way concealed shower mixer combination

2 功能单把入墙淋浴龙头

2-way concealed shower mixer (Horizontal type)

2 功能淋浴本体组（横式）

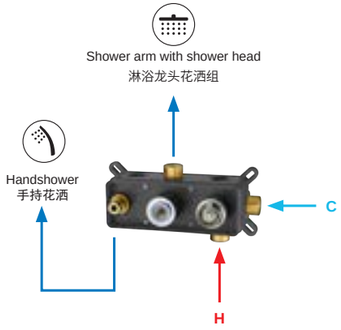

100202312(G1/2)**

Rough-in shower valve

淋浴本体组阀体



ON / OFF

开 / 关

Lift handle to turn water on and adjust water volume.

提起手柄开启并调节水量。

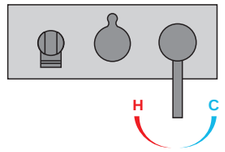

TEMPERATURE ADJUSTMENT

温度调节

Rotate handle counterclockwise for cold water.

Rotate handle clockwise for hot water.

逆时针旋转手柄调节冷水。

顺时针旋转手柄调节热水温度。



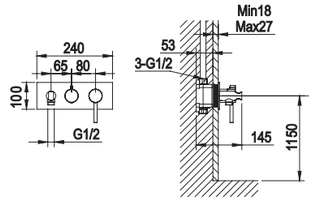

10020232301(37)

Concealed shower mixer

淋浴本体组



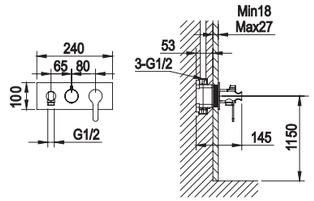

10020232601(111)

Concealed shower mixer

淋浴本体组



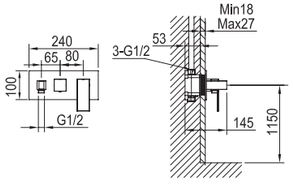

10020257901(75)

Concealed shower mixer

淋浴本体组

2-way concealed shower mixer combination (Horizontal type) technical parameter

2 功能单把入墙淋浴龙头（横式）- 技术参数

• Mounting 安装	Connections: G1/2 Included 连接件：包括 G1/2
• Material 材料	Body: Brass 主体：黄铜 Handle: Zinc alloy 手柄：锌合金
• Cartridge 阀芯	Type: Ceramic 类型：陶瓷 Size: 35mm 尺寸：35mm



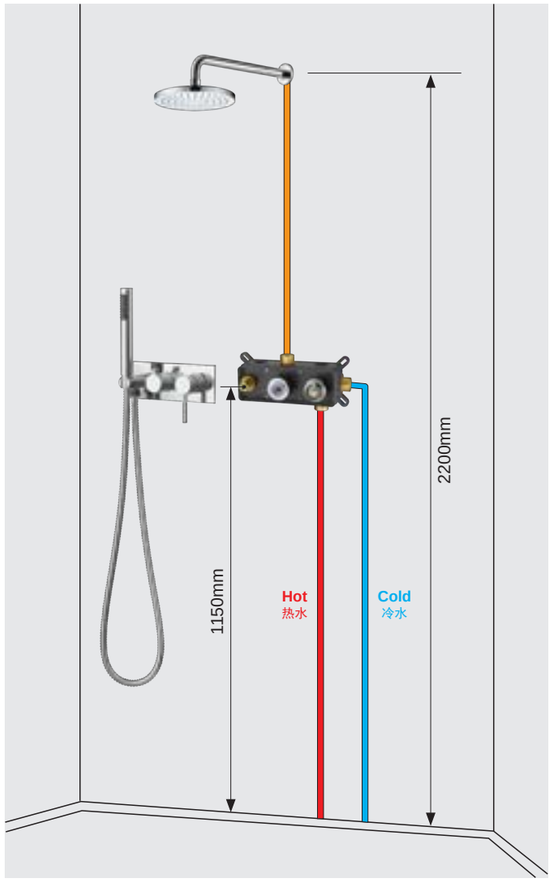

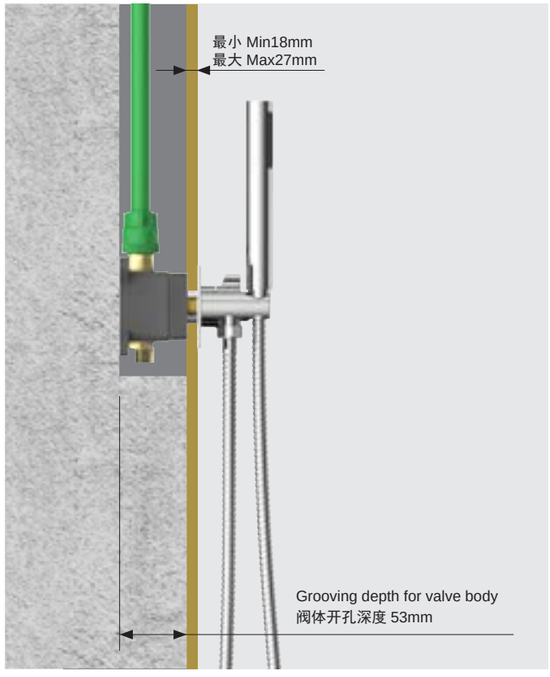

3-WAY CONCEALED SHOWER / BATH MIXER (HORIZONTAL TYPE)

3 功能单把入墙淋浴 / 浴缸龙头（横式）

3-way concealed shower / bath mixer combination (Horizontal type)

3 功能单把入墙淋浴 / 浴缸龙头（横式）









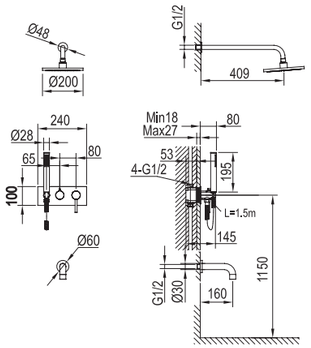

37C 2324 X301 C

3-way concealed shower / bath mixer combination

3 功能单把入墙淋浴 / 浴缸龙头







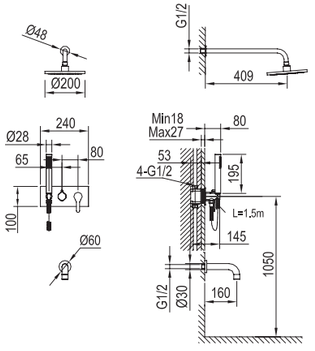

111C 2327 X302 C

3-way concealed shower / bath mixer combination

3 功能单把入墙淋浴 / 浴缸龙头







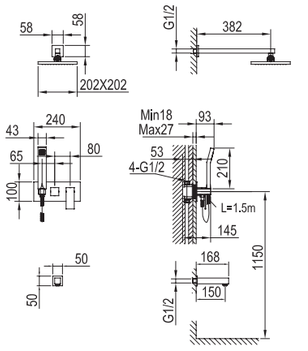

75C 2616 X301 C

3-way concealed shower / bath mixer combination

3 功能单把入墙淋浴 / 浴缸龙头

3-way concealed shower / bath mixer (Horizontal type)

3 功能淋浴 / 浴缸本体组 (横式)

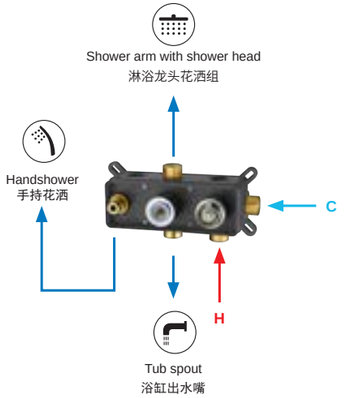

100202313(G1/2)**

Rough-in 3-way shower / bath valve

3 功能淋浴 / 浴缸本体组阀体



ON / OFF

开 / 关

Lift handle to turn water on and adjust water volume.

提起手柄开启并调节水量。

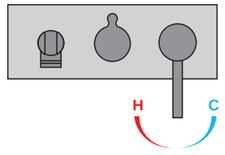

TEMPERATURE ADJUSTMENT

温度调节

Rotate handle counterclockwise for cold water.

Rotate handle clockwise for hot water.

逆时针旋转手柄调节冷水。

顺时针旋转手柄调节热水温度。



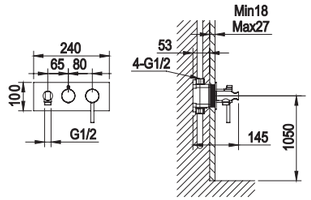

10020232401(37)

3-way concealed shower / bath mixer

3 功能淋浴 / 浴缸本体组



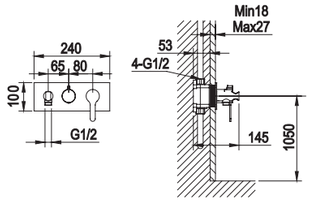

10020232701(111)

3-way concealed shower / bath mixer

3 功能淋浴 / 浴缸本体组



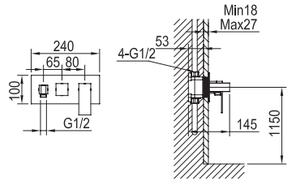

10020261601(75)

3-way concealed shower / bath mixer

3 功能淋浴 / 浴缸本体组

3-way concealed shower mixer combination (Horizontal type) technical parameter

3 功能单把入墙淋浴龙头（横式）- 技术参数

• Mounting 安装	Connections: G1/2 Included 连接件：包括 G1/2
• Material 材料	Body: Brass 主体：黄铜 Handle: Zinc alloy 手柄：锌合金
• Cartridge 阀芯	Type: Ceramic 类型：陶瓷 Size: 35mm 尺寸：35mm

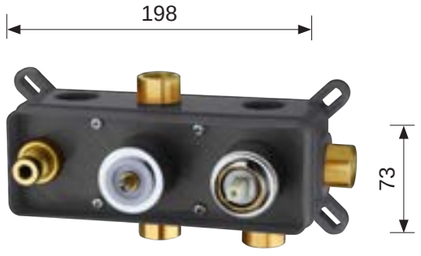

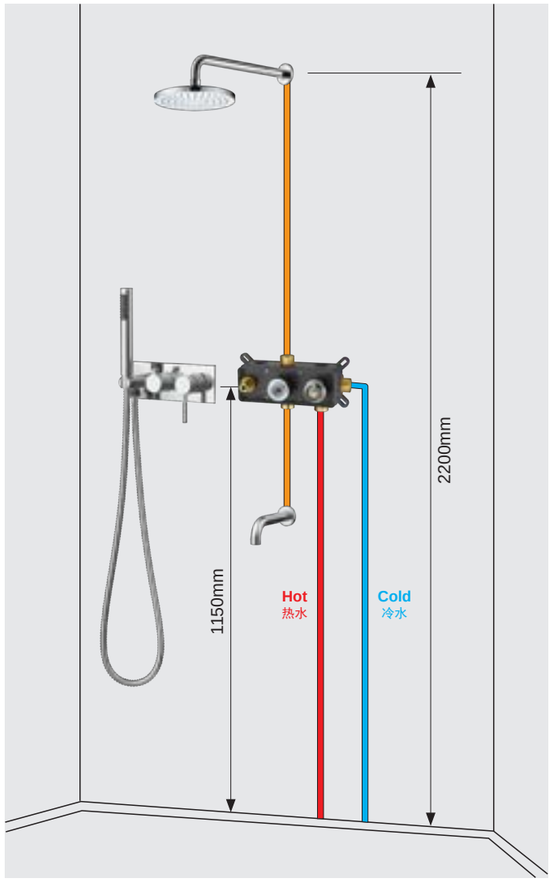

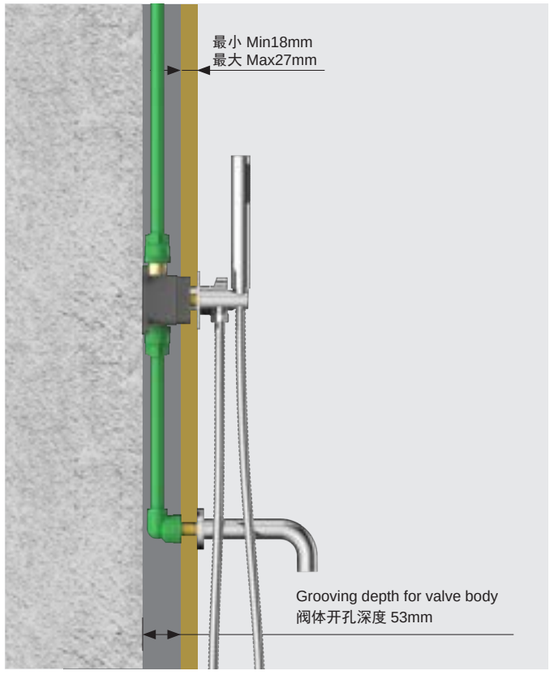

2-WAY THERMOSTATIC CONCEALED SHOWER / BATH MIXER COMBINATION

2 功能恒温入墙淋浴 / 浴缸龙头

2-way thermostatic concealed shower / bath mixer combination
2 功能恒温入墙淋浴 / 浴缸龙头

D



15T 2251 D201 C
2-way thermostatic concealed shower / bath mixer combination
2 功能恒温入墙淋浴 / 浴缸龙头

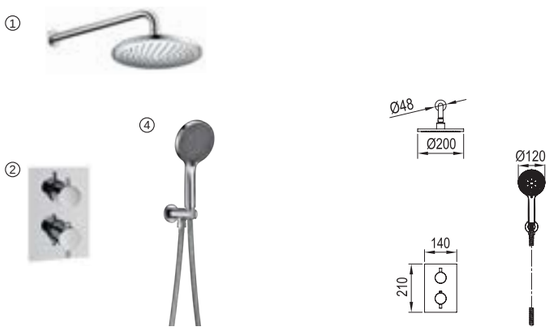

15T 2251 A201 C
2-way thermostatic concealed shower mixer combination
2 功能恒温入墙淋浴龙头

A

① **50030114701**
Shower arm with shower head (8")
淋浴龙头花洒组 (8")

② **10020225101(15)**
Thermostatic concealed shower / bath mixer
恒温淋浴 / 浴缸本体组

/10020217400
Rough-in thermostatic shower / bath valve
恒温淋浴 / 浴缸本体组阀体

④ **50030248301**
Wall-mounted 3-jet handshower set
3 功能入墙式手握花洒组



15T 2251 B201 C
2-way thermostatic concealed shower mixer combination
2 功能恒温入墙淋浴龙头

B

① **50030114701**
Shower arm with shower head (8")
淋浴龙头花洒组 (8")

② **10020225101(15)**
Thermostatic concealed shower / bath mixer
恒温淋浴 / 浴缸本体组

/10020217400
Rough-in thermostatic shower / bath valve
恒温淋浴 / 浴缸本体组阀体

⑤ **50030244701**
Wall-mounted 3-jet handshower set
3 功能壁挂式手握花洒组

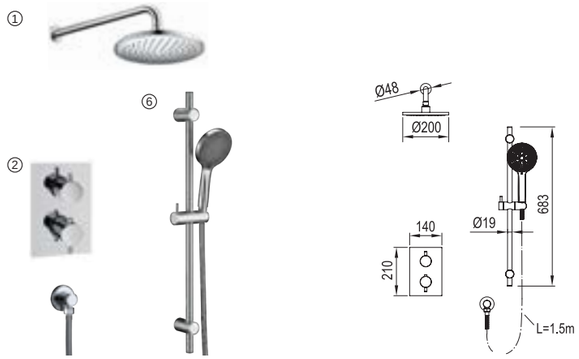

15T 2251 C201 C
2-way thermostatic concealed shower mixer combination
2 功能恒温入墙淋浴龙头

C

① **50030114701**
Shower arm with shower head (8")
淋浴龙头花洒组 (8")

② **10020225101(15)**
Thermostatic concealed shower / bath mixer
恒温淋浴 / 浴缸本体组

/10020217400
Rough-in thermostatic shower / bath valve
恒温淋浴 / 浴缸本体组阀体

⑥ **H8 7646C**
Wall-mounted sliding bar with 3-jet handshower set
3 功能壁挂式升降杆花洒组

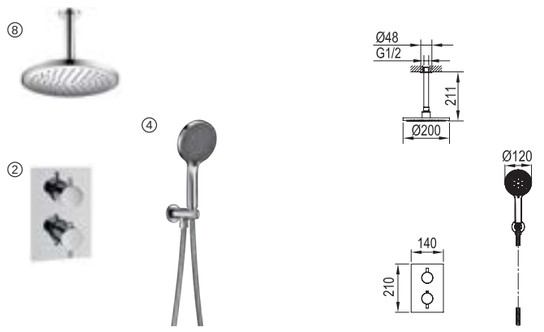

15T 2251 E201 C
2-way thermostatic concealed shower mixer combination
2 功能恒温入墙淋浴龙头

E

⑧ **50030269801**
Ceiling shower arm with shower head (8")
顶置式花洒组 (8")

② **10020225101(15)**
Thermostatic concealed shower / bath mixer
恒温淋浴 / 浴缸本体组

/10020217400
Rough-in thermostatic shower / bath valve
恒温淋浴 / 浴缸本体组阀体

④ **50030248301**
Wall-mounted 3-jet handshower set
3 功能入墙式手握花洒组

2-way thermostatic concealed shower / bath mixer combination

2 功能恒温入墙淋浴 / 浴缸龙头

2-way thermostatic concealed shower / bath mixer combination
2 功能恒温入墙淋浴 / 浴缸龙头

B



15T 2255 B201 C
2-way thermostatic concealed shower mixer combination
2 功能恒温入墙淋浴龙头

A

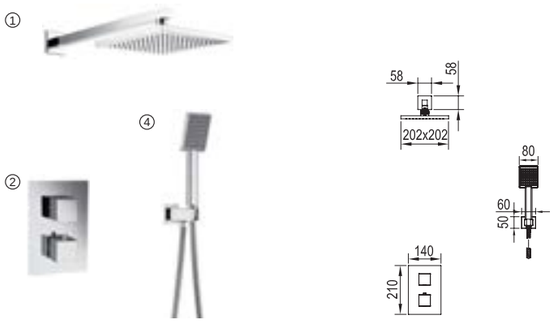

① **50030224501**
Shower arm with shower head (8")
淋浴龙头花洒组 (8")

② **10020225501(15)**
Thermostatic concealed shower / bath mixer
恒温淋浴 / 浴缸本体组

/10020217400
Rough-in thermostatic shower / bath valve
恒温淋浴 / 浴缸本体组阀体

④ **50030249101**
Wall-mounted handshower set
入墙式手握花洒组

15T 2255 A201 C
2-way thermostatic concealed shower mixer combination
2 功能恒温入墙淋浴龙头

C



① **50030224501**
Shower arm with shower head (8")
淋浴龙头花洒组 (8")

② **10020225501(15)**
Thermostatic concealed shower / bath mixer
恒温淋浴 / 浴缸本体组

/10020217400
Rough-in thermostatic shower / bath valve
恒温淋浴 / 浴缸本体组阀体

⑥ **H8 7699C**
Wall-mounted sliding bar with handshower set
壁挂式升降杆花洒组

15T 2255 C202 C
2-way thermostatic concealed shower mixer combination
2 功能恒温入墙淋浴龙头

D



① **50030224501**
Shower arm with shower head (8")
淋浴龙头花洒组 (8")

② **10020225501(15)**
Thermostatic concealed shower / bath mixer
恒温淋浴 / 浴缸本体组

/10020217400
Rough-in thermostatic shower / bath valve
恒温淋浴 / 浴缸本体组阀体

③ **30020041801**
Tub spout
浴缸出水嘴

15T 2255 D201 C
2-way thermostatic concealed shower / bath mixer combination
2 功能恒温入墙淋浴 / 浴缸龙头

E

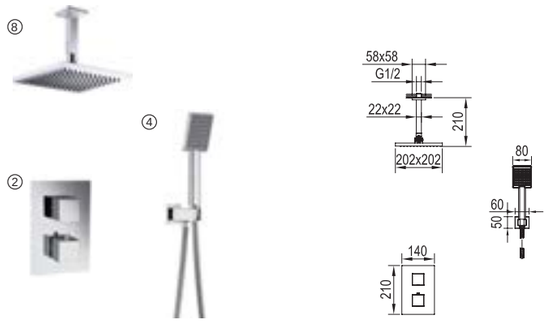

⑧ **50030269701**
Ceiling shower arm with shower head (8")
顶置式花洒组 (8")

② **10020225501(15)**
Thermostatic concealed shower / bath mixer
恒温淋浴 / 浴缸本体组

/10020217400
Rough-in thermostatic shower / bath valve
恒温淋浴 / 浴缸本体组阀体

④ **50030249101**
Wall-mounted handshower set
入墙式手握花洒组

15T 2255 E201 C
2-way thermostatic concealed shower mixer combination
2 功能恒温入墙淋浴龙头



2-way thermostatic concealed shower / bath mixer combination technical parameter
2 功能恒温入墙淋浴 / 浴缸龙头技术参数

● Mounting 安装	Connections: G1/2 Included 连接件：包括 G1/2
● Material 材料	Body: Brass 主体：黄铜 Handle: Zinc alloy 手柄：锌合金
● Cartridge 阀芯	Type: Thermostatic 类型：恒温 Size: 35mm 尺寸：35mm

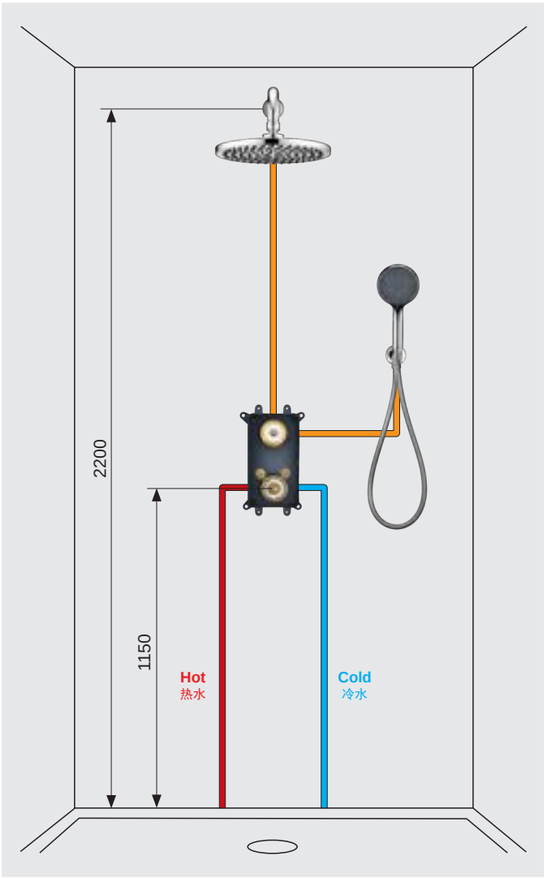

38°

2 WAY

2-way thermostatic concealed shower / bath mixer
2 功能恒温淋浴 / 浴缸本体组

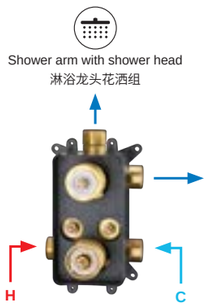

10020217400(G1/2)
Rough-in 2-way thermostatic shower / bath valve
2 功能恒温淋浴 / 浴缸本体组阀体

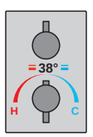

TEMPERATURE ADJUSTMENT
温度调节

Rotate handle counterclockwise
for hot water.
Rotate handle clockwise
for cold water.

逆时针旋转手柄调节热水温度。
顺时针旋转手柄调节冷水。



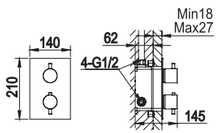

10020225101(15)
Thermostatic concealed shower / bath mixer
恒温淋浴 / 浴缸本体组



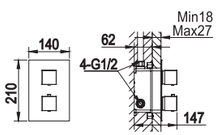

10020225501(15)
Thermostatic concealed shower / bath mixer
恒温淋浴 / 浴缸本体组

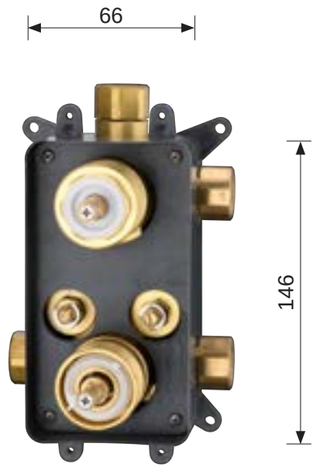

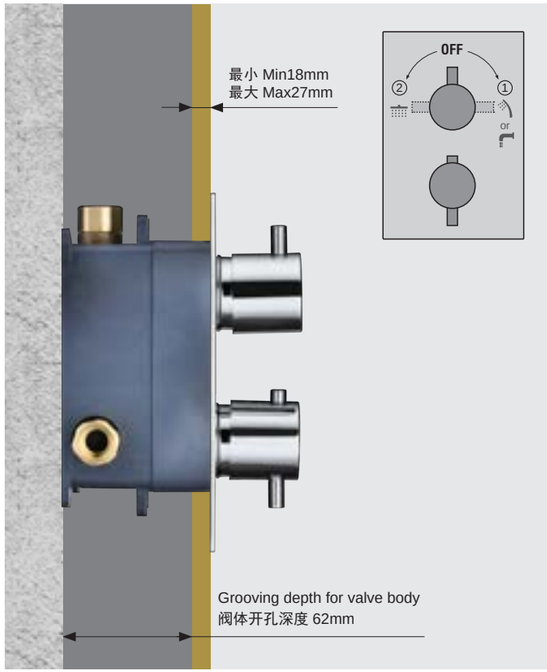

2-way thermostatic concealed shower / bath mixer combination

2 功能恒温入墙淋浴 / 浴缸龙头

2-way thermostatic concealed shower / bath mixer combination
2 功能恒温入墙淋浴 / 浴缸龙头



15T 2686 E201 C
2-way thermostatic concealed shower mixer combination
2 功能恒温入墙淋浴龙头

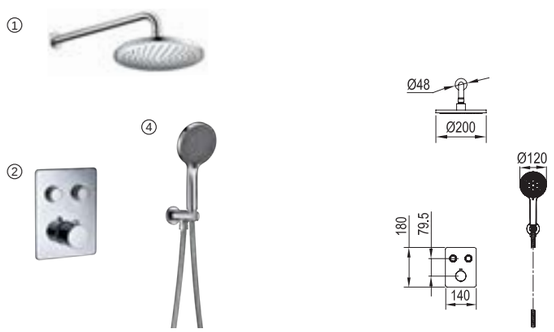

15T 2686 A201 C
2-way thermostatic concealed shower mixer combination
2 功能恒温入墙淋浴龙头

A

① **50030114701**
Shower arm with shower head (8")
淋浴龙头花洒组 (8")

② **10020268601(15)**
Thermostatic concealed shower / bath mixer
恒温淋浴 / 浴缸本体组

/100202853**
Rough-in thermostatic shower / bath valve
恒温淋浴 / 浴缸本体组阀体

④ **50030248301**
Wall-mounted 3-jet handshower set
3 功能入墙式手握花洒组

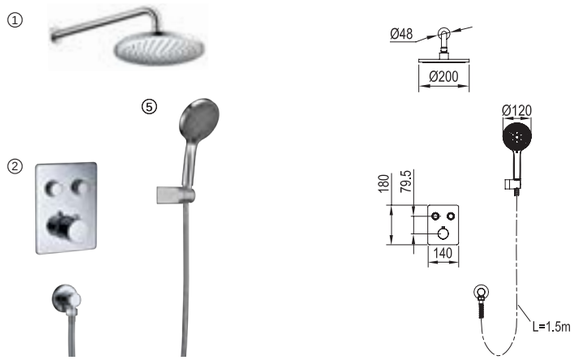

15T 2686 B201 C
2-way thermostatic concealed shower mixer combination
2 功能恒温入墙淋浴龙头

B

① **50030114701**
Shower arm with shower head (8")
淋浴龙头花洒组 (8")

② **10020268601(15)**
Thermostatic concealed shower / bath mixer
恒温淋浴 / 浴缸本体组

/100202853**
Rough-in thermostatic shower / bath valve
恒温淋浴 / 浴缸本体组阀体

⑤ **50030244701**
Wall-mounted 3-jet handshower set
3 功能壁挂式手握花洒组

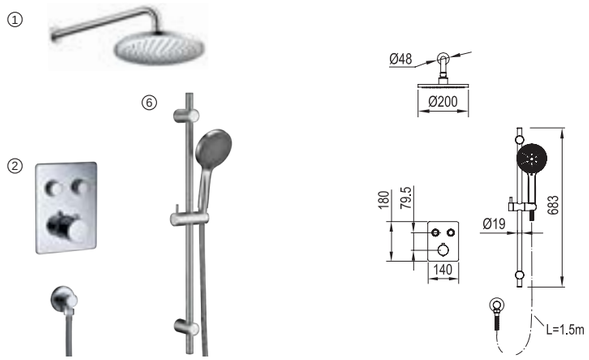

15T 2686 C201 C
2-way thermostatic concealed shower mixer combination
2 功能恒温入墙淋浴龙头

C

① **50030114701**
Shower arm with shower head (8")
淋浴龙头花洒组 (8")

② **10020268601(15)**
Thermostatic concealed shower / bath mixer
恒温淋浴 / 浴缸本体组

/100202853**
Rough-in thermostatic shower / bath valve
恒温淋浴 / 浴缸本体组阀体

⑥ **H8 7646C**
Wall-mounted sliding bar with 3-jet handshower set
3 功能壁挂式升降杆花洒组

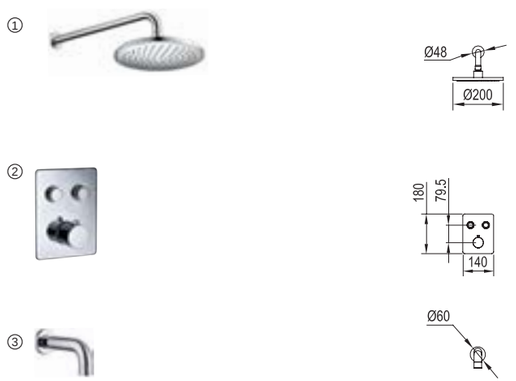

15T 2686 D201 C
2-way thermostatic concealed shower / bath mixer combination
2 功能恒温入墙淋浴 / 浴缸龙头

D

① **50030114701**
Shower arm with shower head (8")
淋浴龙头花洒组 (8")

② **10020268601(15)**
Thermostatic concealed shower / bath mixer
恒温淋浴 / 浴缸本体组

/100202853**
Rough-in thermostatic shower / bath valve
恒温淋浴 / 浴缸本体组阀体

③ **30020041701**
Tub spout
浴缸出水嘴





2-way thermostatic concealed shower / bath mixer combination technical parameter
2 功能恒温入墙淋浴 / 浴缸龙头技术参数

• Mounting 安装	Connections: G1/2 Included 连接件：包括 G1/2
• Material 材料	Body: Brass 主体：黄铜 Handle: Zinc alloy 手柄：锌合金
• Cartridge 阀芯	Type: Thermostatic 类型：恒温 Size: 35mm 尺寸：35mm

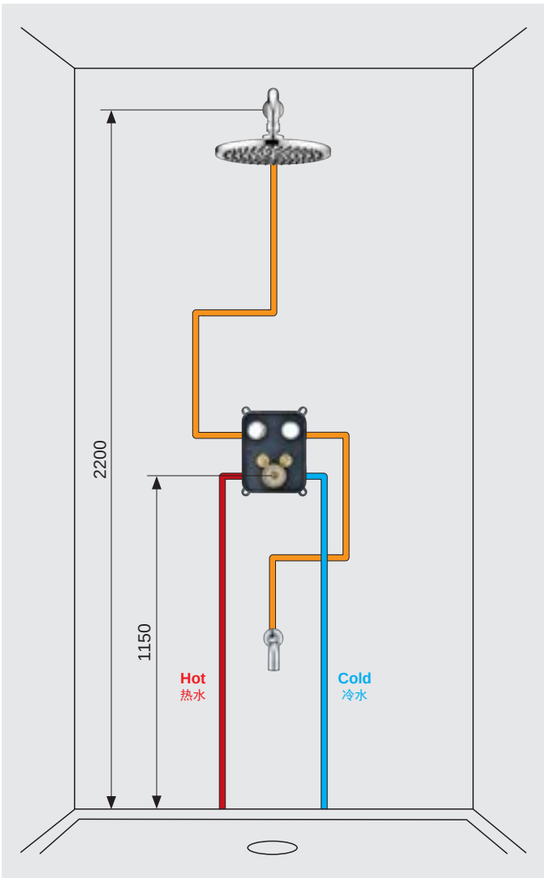

38°

2 WAY

2-way thermostatic concealed shower / bath mixer
2 功能恒温淋浴 / 浴缸本体组

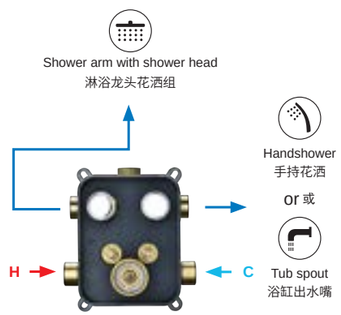

100202853**
Rough-in 2-way thermostatic shower / bath valve
2 功能恒温淋浴 / 浴缸本体组阀体

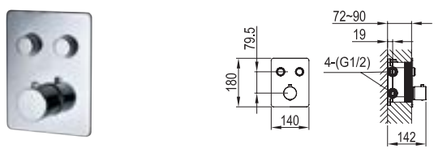

10020268601(15)
Thermostatic concealed shower / bath mixer
恒温淋浴 / 浴缸本体组

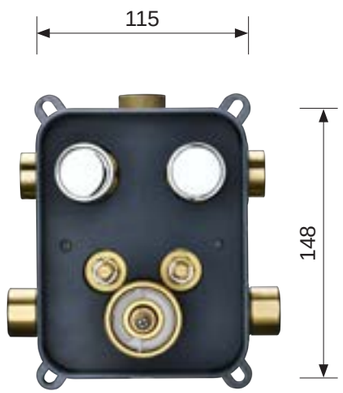

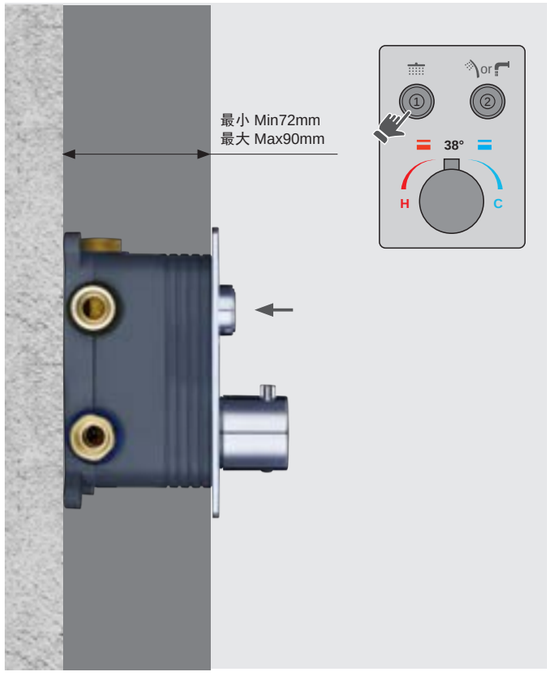

3-WAY THERMOSTATIC CONCEALED SHOWER / BATH MIXER COMBINATION

3 功能恒温入墙淋浴 / 浴缸龙头

3-way thermostatic concealed shower / bath mixer combination
3 功能恒温入墙淋浴 / 浴缸龙头

C



15T 2252 C301 C
3-way thermostatic concealed shower / bath mixer combination
3 功能恒温入墙淋浴 / 浴缸龙头

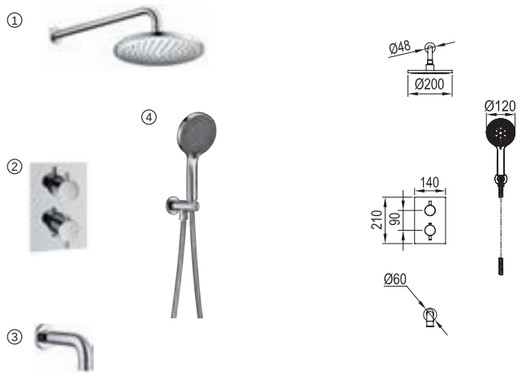

15T 2252 A301 C
3-way thermostatic concealed shower / bath mixer combination
3 功能恒温入墙淋浴 / 浴缸龙头

A

① **50030114701**
Shower arm with shower head (8")
淋浴龙头花洒组 (8")

② **10020225201(15)**
3-way concealed shower / bath mixer
3 功能淋浴 / 浴缸本体组

/10020217500
Rough-in 3-way shower / bath valve
3 功能淋浴 / 浴缸本体组阀体

③ **30020041701**
Tub spout
浴缸出水嘴

④ **50030248301**
Wall-mounted 3-jet handshower set
3 功能入墙式手握花洒组



15T 2252 B301 C
3-way thermostatic concealed shower / bath mixer combination
3 功能恒温入墙淋浴 / 浴缸龙头

B

① **50030114701**
Shower arm with shower head (8")
淋浴龙头花洒组 (8")

② **10020225201(15)**
3-way concealed shower / bath mixer
3 功能淋浴 / 浴缸本体组

/10020217500
Rough-in 3-way shower / bath valve
3 功能淋浴 / 浴缸本体组阀体

③ **30020041701**
Tub spout
浴缸出水嘴

⑤ **50030244701**
Wall-mounted 3-jet handshower set
3 功能壁挂式手握花洒组

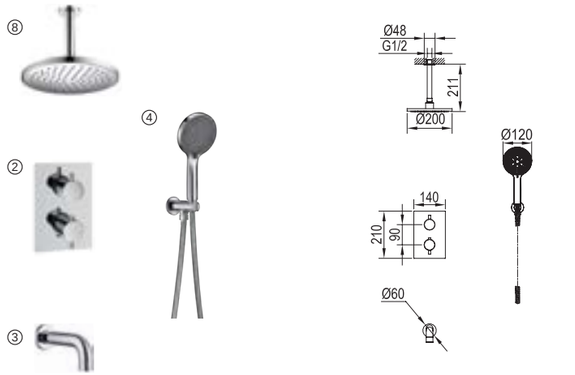

15T 2252 G301 C
3-way thermostatic concealed shower / bath mixer combination
3 功能恒温入墙淋浴 / 浴缸龙头

G

⑧ **50030269801**
Ceiling shower arm with shower head (8")
顶置式花洒组 (8")

② **10020225201(15)**
3-way concealed shower / bath mixer
3 功能淋浴 / 浴缸本体组

/10020217500
Rough-in 3-way shower / bath valve
3 功能淋浴 / 浴缸本体组阀体

③ **30020041701**
Tub spout
浴缸出水嘴

④ **50030248301**
Wall-mounted 3-jet handshower set
3 功能入墙式手握花洒组



15T 2252 H301 C
3-way thermostatic concealed shower / bath mixer combination
3 功能恒温入墙淋浴 / 浴缸龙头

H

⑧ **50030269801**
Ceiling shower arm with shower head (8")
顶置式花洒组 (8")

② **10020225201(15)**
3-way concealed shower / bath mixer
3 功能淋浴 / 浴缸本体组

/10020217500
Rough-in 3-way shower / bath valve
3 功能淋浴 / 浴缸本体组阀体

③ **30020041701**
Tub spout
浴缸出水嘴

⑤ **50030244701**
Wall-mounted 3-jet handshower set
3 功能壁挂式手握花洒组

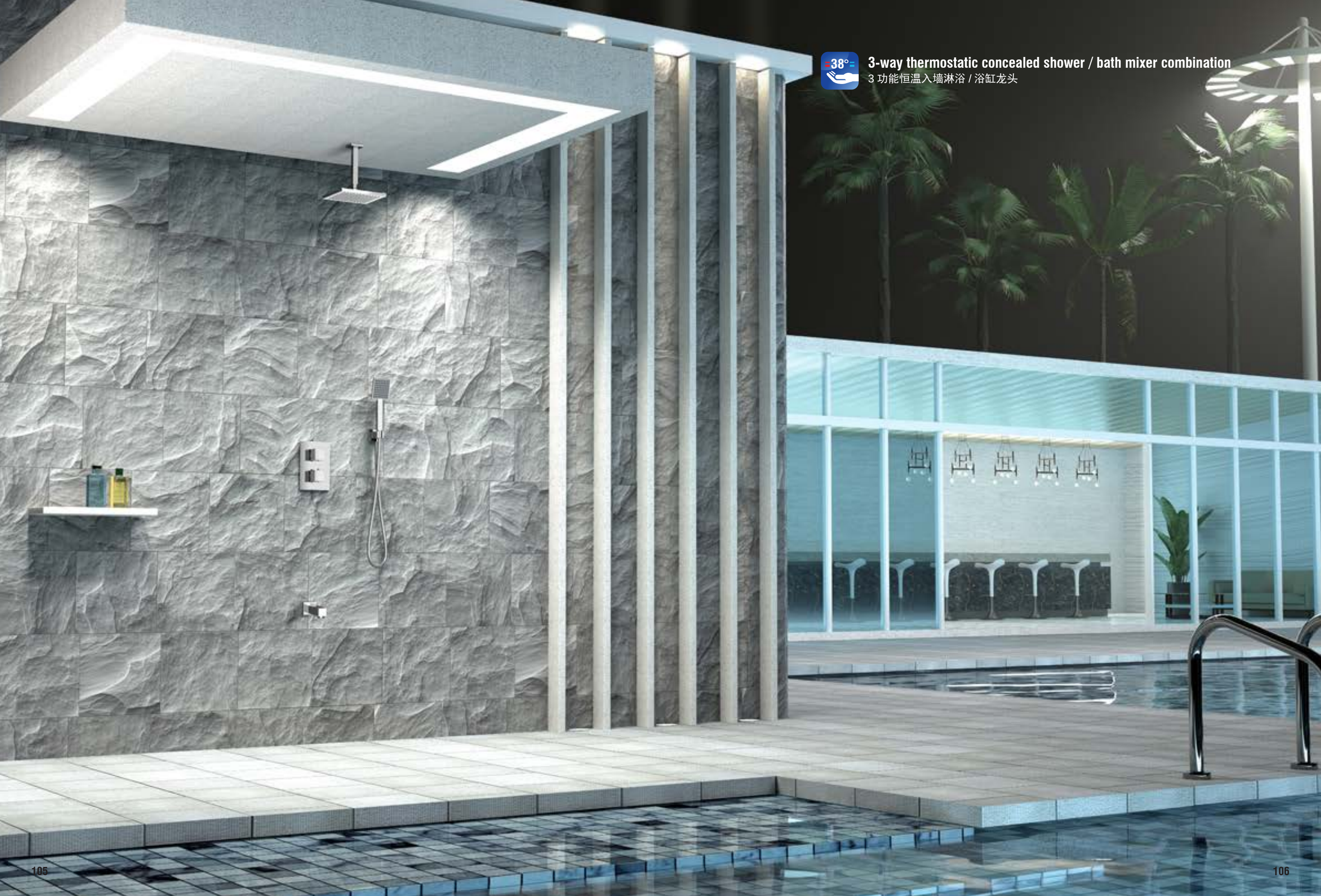

3-way thermostatic concealed shower / bath mixer combination
3 功能恒温入墙淋浴 / 浴缸龙头

3-way thermostatic concealed shower / bath mixer combination
3 功能恒温入墙淋浴 / 浴缸龙头

A



15T 2256 A301 C
3-way thermostatic concealed shower / bath mixer combination
3 功能恒温入墙淋浴 / 浴缸龙头

B

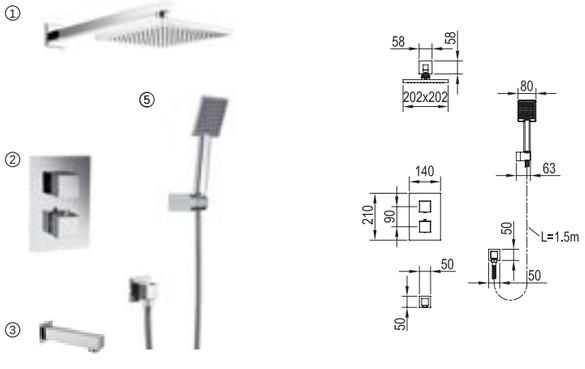

15T 2256 B301 C
3-way thermostatic concealed shower / bath mixer combination
3 功能恒温入墙淋浴 / 浴缸龙头

① **50030224501**
Shower arm with shower head (8")
淋浴龙头花洒组 (8")

② **10020225601(15)**
3-way concealed shower / bath mixer
3 功能淋浴 / 浴缸本体组

/10020217500
Rough-in 3-way shower / bath valve
3 功能淋浴 / 浴缸本体组阀体

③ **30020041801**
Tub spout
浴缸出水嘴

⑤ **50030244601**
Wall-mounted handshower set
壁挂式手握花洒组



15T 2256 C302 C
3-way thermostatic concealed shower / bath mixer combination
3 功能恒温入墙淋浴 / 浴缸龙头

C

① **50030224501**
Shower arm with shower head (8")
淋浴龙头花洒组 (8")

② **10020225601(15)**
3-way concealed shower / bath mixer
3 功能淋浴 / 浴缸本体组

/10020217500
Rough-in 3-way shower / bath valve
3 功能淋浴 / 浴缸本体组阀体

③ **30020041801**
Tub spout
浴缸出水嘴

⑥ **H8 7699C**
Wall-mounted sliding bar with handshower set
壁挂式升降杆花洒组

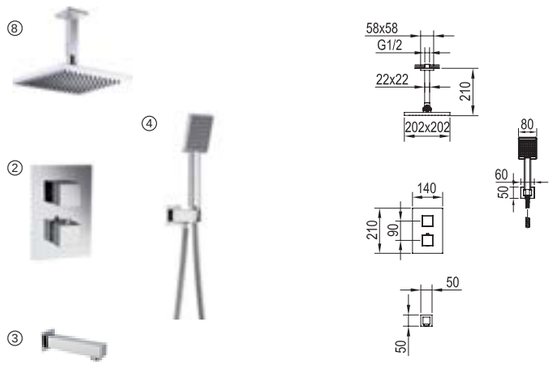

15T 2256 G301 C
3-way thermostatic concealed shower / bath mixer combination
3 功能恒温入墙淋浴 / 浴缸龙头

G

⑧ **50030269701**
Ceiling shower arm with shower head (8")
顶置式花洒组 (8")

② **10020225601(15)**
3-way concealed shower / bath mixer
3 功能淋浴 / 浴缸本体组

/10020217500
Rough-in 3-way shower / bath valve
3 功能淋浴 / 浴缸本体组阀体

③ **30020041801**
Tub spout
浴缸出水嘴

④ **50030249101**
Wall-mounted handshower set
入墙式手握花洒组

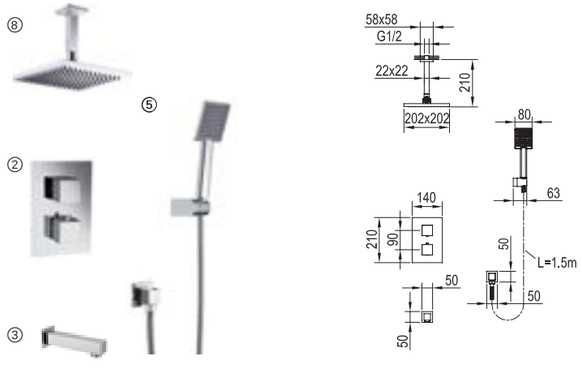

15T 2256 H301 C
3-way thermostatic concealed shower / bath mixer combination
3 功能恒温入墙淋浴 / 浴缸龙头

H

⑧ **50030269701**
Ceiling shower arm with shower head (8")
顶置式花洒组 (8")

② **10020225601(15)**
3-way concealed shower / bath mixer
3 功能淋浴 / 浴缸本体组

/10020217500
Rough-in 3-way shower / bath valve
3 功能淋浴 / 浴缸本体组阀体

③ **30020041801**
Tub spout
浴缸出水嘴

⑤ **50030244601**
Wall-mounted handshower set
壁挂式手握花洒组



15T 2256 A301 C
3-way thermostatic concealed shower / bath mixer combination
3 功能恒温入墙淋浴 / 浴缸龙头

3-way thermostatic concealed shower / bath mixer combination technical parameter
3 功能恒温入墙淋浴 / 浴缸龙头技术参数

● Mounting 安装	Connections: G1/2 Included 连接件：包括 G1/2
● Material 材料	Body: Brass 主体：黄铜 Handle: Zinc alloy 手柄：锌合金
● Cartridge 阀芯	Type: Thermostatic 类型：恒温 Size: 35mm 尺寸：35mm

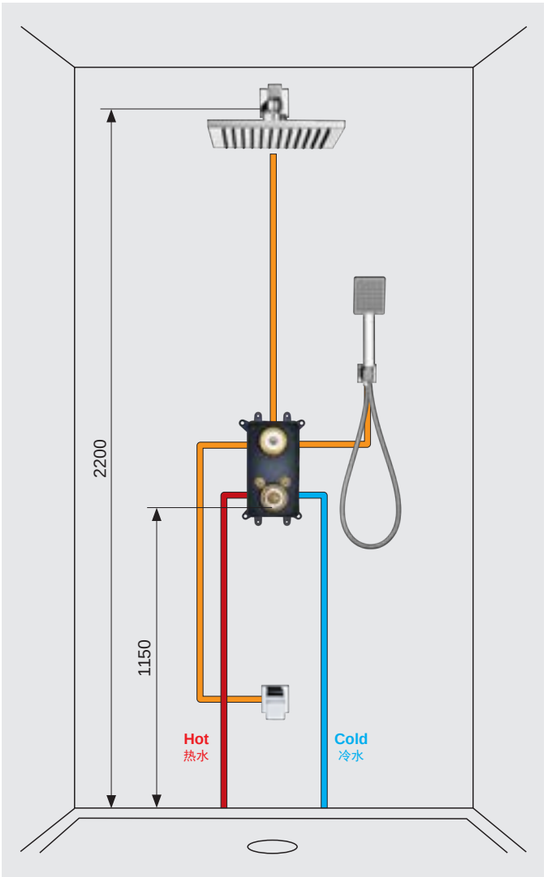

38°
3 WAY

3-way thermostatic concealed shower / bath mixer
3 功能恒温淋浴 / 浴缸本体组

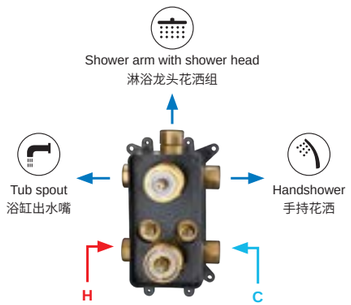

10020217500(G1/2)
Rough-in 3-way thermostatic shower / bath valve
3 功能恒温淋浴 / 浴缸本体组阀体

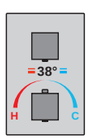

TEMPERATURE ADJUSTMENT
温度调节

Rotate handle counterclockwise
for hot water.
Rotate handle clockwise
for cold water.

逆时针旋转手柄调节热水温度。
顺时针旋转手柄调节冷水。



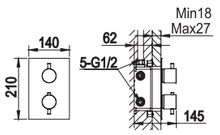

10020225201(15)
3-way thermostatic concealed shower / bath mixer
3 功能恒温淋浴 / 浴缸本体组



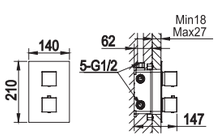

10020225601(15)
3-way thermostatic concealed shower / bath mixer
3 功能恒温淋浴 / 浴缸本体组

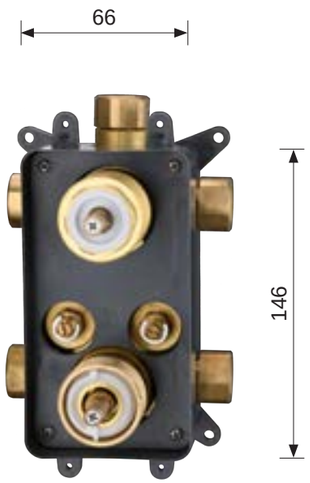

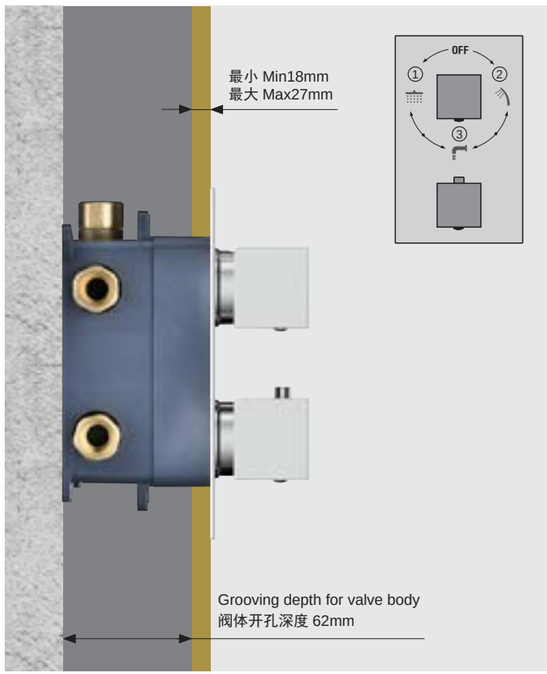

3-way thermostatic concealed shower / bath mixer combination

3 功能恒温入墙淋浴 / 浴缸龙头



3-way thermostatic concealed shower / bath mixer combination
3 功能恒温入墙淋浴 / 浴缸龙头

G



15T 2687 G301 C
3-way thermostatic concealed shower / bath mixer combination
3 功能恒温入墙淋浴 / 浴缸龙头

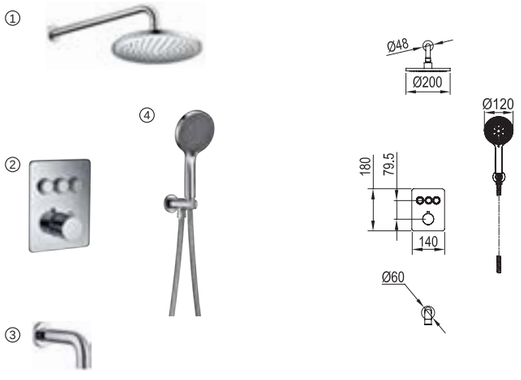

15T 2687 A301 C
3-way thermostatic concealed shower / bath mixer combination
3 功能恒温入墙淋浴 / 浴缸龙头

A

① **50030114701**
Shower arm with shower head (8")
淋浴龙头花洒组 (8")

② **10020268701(15)**
3-way concealed shower / bath mixer
3 功能淋浴 / 浴缸本体组

/100202852**
Rough-in 3-way shower / bath valve
3 功能淋浴 / 浴缸本体组阀体

③ **30020041701**
Tub spout
浴缸出水嘴

④ **50030248301**
Wall-mounted 3-jet handshower set
3 功能入墙式手握花洒组



15T 2687 B301 C
3-way thermostatic concealed shower / bath mixer combination
3 功能恒温入墙淋浴 / 浴缸龙头

B

① **50030114701**
Shower arm with shower head (8")
淋浴龙头花洒组 (8")

② **10020268701(15)**
3-way concealed shower / bath mixer
3 功能淋浴 / 浴缸本体组

/100202852**
Rough-in 3-way shower / bath valve
3 功能淋浴 / 浴缸本体组阀体

③ **30020041701**
Tub spout
浴缸出水嘴

⑤ **50030244701**
Wall-mounted 3-jet handshower set
3 功能壁挂式手握花洒组



15T 2687 C301 C
3-way thermostatic concealed shower / bath mixer combination
3 功能恒温入墙淋浴 / 浴缸龙头

C

① **50030114701**
Shower arm with shower head (8")
淋浴龙头花洒组 (8")

② **10020268701(15)**
3-way concealed shower / bath mixer
3 功能淋浴 / 浴缸本体组

/100202852**
Rough-in 3-way shower / bath valve
3 功能淋浴 / 浴缸本体组阀体

③ **30020041701**
Tub spout
浴缸出水嘴

⑥ **H8 7646C**
Wall-mounted sliding bar with 3-jet handshower set
3 功能壁挂式升降杆花洒组



15T 2687 H301 C
3-way thermostatic concealed shower / bath mixer combination
3 功能恒温入墙淋浴 / 浴缸龙头

H

⑧ **50030269801**
Ceiling shower arm with shower head (8")
顶置式花洒组 (8")

② **10020268701(15)**
3-way concealed shower / bath mixer
3 功能淋浴 / 浴缸本体组

/100202852**
Rough-in 3-way shower / bath valve
3 功能淋浴 / 浴缸本体组阀体

③ **30020041701**
Tub spout
浴缸出水嘴

⑤ **50030244701**
Wall-mounted 3-jet handshower set
3 功能壁挂式手握花洒组

3-way thermostatic concealed shower / bath mixer combination

3 功能恒温入墙淋浴 / 浴缸龙头

3-way thermostatic concealed shower / bath mixer combination
3 功能恒温入墙淋浴 / 浴缸龙头

A



15T 2837 G301 C
3-way thermostatic concealed shower / bath mixer combination
3 功能恒温入墙淋浴 / 浴缸龙头

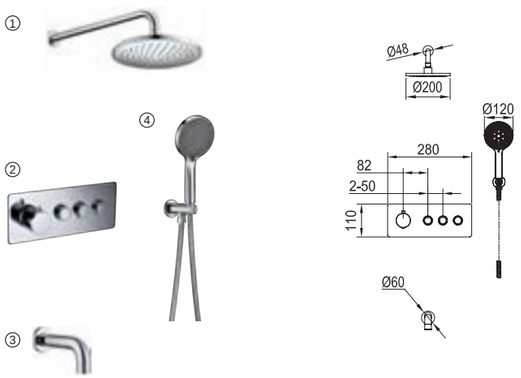

15T 2837 A301 C
3-way thermostatic concealed shower / bath mixer combination
3 功能恒温入墙淋浴 / 浴缸龙头

A

① **50030114701**
Shower arm with shower head (8")
淋浴龙头花洒组 (8")

② **10020283701(15)**
3-way concealed shower / bath mixer
3 功能淋浴 / 浴缸本体组

/100202851**
Rough-in 3-way shower / bath valve
3 功能淋浴 / 浴缸本体组阀体

③ **30020041701**
Tub spout
浴缸出水嘴

④ **50030248301**
Wall-mounted 3-jet handshower set
3 功能入墙式手握花洒组



15T 2837 B301 C
3-way thermostatic concealed shower / bath mixer combination
3 功能恒温入墙淋浴 / 浴缸龙头

B

① **50030114701**
Shower arm with shower head (8")
淋浴龙头花洒组 (8")

② **10020283701(15)**
3-way concealed shower / bath mixer
3 功能淋浴 / 浴缸本体组

/100202851**
Rough-in 3-way shower / bath valve
3 功能淋浴 / 浴缸本体组阀体

③ **30020041701**
Tub spout
浴缸出水嘴

⑤ **50030244701**
Wall-mounted 3-jet handshower set
3 功能壁挂式手握花洒组

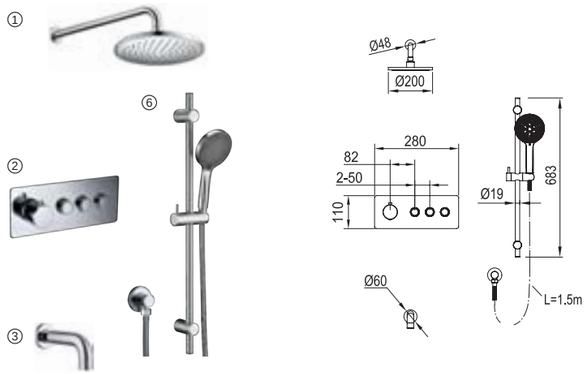

15T 2837 C301 C
3-way thermostatic concealed shower / bath mixer combination
3 功能恒温入墙淋浴 / 浴缸龙头

C

① **50030114701**
Shower arm with shower head (8")
淋浴龙头花洒组 (8")

② **10020283701(15)**
3-way concealed shower / bath mixer
3 功能淋浴 / 浴缸本体组

/100202851**
Rough-in 3-way shower / bath valve
3 功能淋浴 / 浴缸本体组阀体

③ **30020041701**
Tub spout
浴缸出水嘴

⑥ **H8 7646C**
Wall-mounted sliding bar with 3-jet handshower set
3 功能壁挂式升降杆花洒组



15T 2837 H301 C
3-way thermostatic concealed shower / bath mixer combination
3 功能恒温入墙淋浴 / 浴缸龙头

H

⑧ **50030269801**
Ceiling shower arm with shower head (8")
顶置式花洒组 (8")

② **10020283701(15)**
3-way concealed shower / bath mixer
3 功能淋浴 / 浴缸本体组

/100202851**
Rough-in 3-way shower / bath valve
3 功能淋浴 / 浴缸本体组阀体

③ **30020041701**
Tub spout
浴缸出水嘴

⑤ **50030244701**
Wall-mounted 3-jet handshower set
3 功能壁挂式手握花洒组



2-way thermostatic concealed shower / bath mixer combination technical parameter
2 功能恒温入墙淋浴 / 浴缸龙头技术参数

• Mounting 安装	Connections: G1/2 Included 连接件：包括 G1/2
• Material 材料	Body: Brass 主体：黄铜 Handle: Zinc alloy 手柄：锌合金
• Cartridge 阀芯	Type: Thermostatic 类型：恒温 Size: 35mm 尺寸：35mm

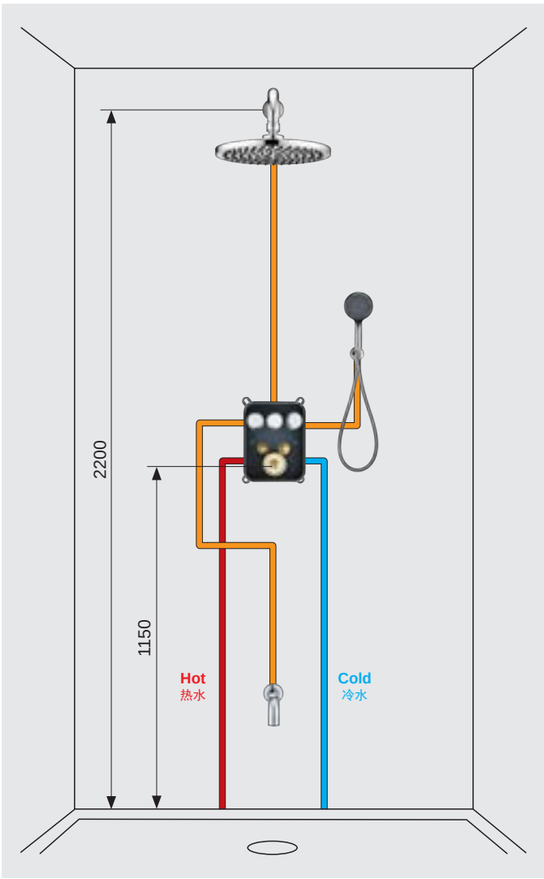

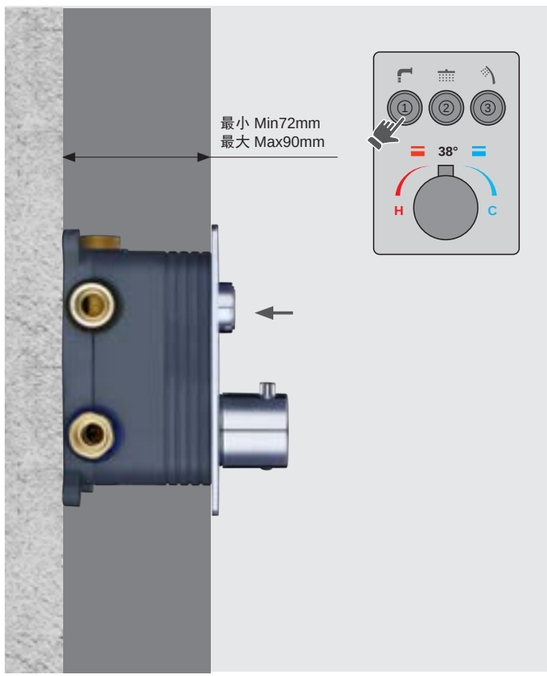

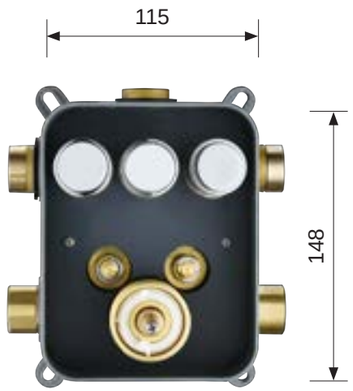

3-way thermostatic concealed shower / bath mixer
3 功能恒温淋浴 / 浴缸本体组

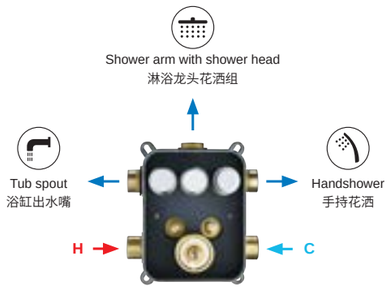

100202852**
Rough-in 3-way thermostatic shower / bath valve
3 功能恒温淋浴 / 浴缸本体组阀体

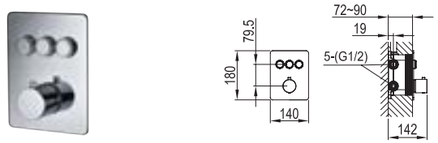

10020268701(15)
3-way thermostatic concealed shower / bath mixer
3 功能恒温淋浴 / 浴缸本体组



3-way thermostatic concealed shower / bath mixer combination technical parameter

3 功能恒温入墙淋浴 / 浴缸龙头技术参数

● Mounting 安装	Connections: G1/2 Included 连接件：包括 G1/2
● Material 材料	Body: Brass 主体：黄铜 Handle: Zinc alloy 手柄：锌合金
● Cartridge 阀芯	Type: Thermostatic 类型：恒温 Size: 35mm 尺寸：35mm

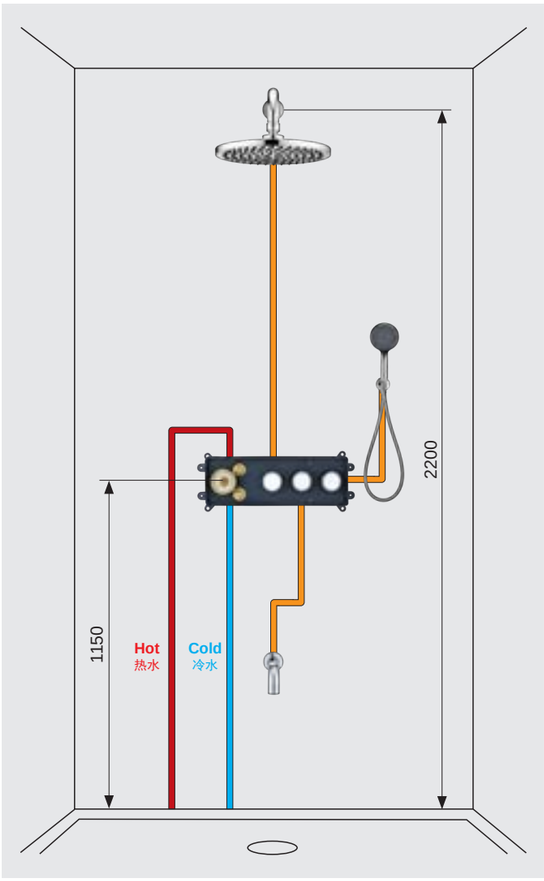

38° 3 WAY

3-way thermostatic concealed shower / bath mixer

3 功能恒温淋浴 / 浴缸本体组

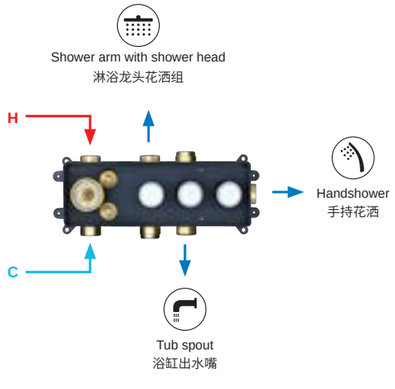

100202851**

Rough-in 3-way thermostatic shower / bath valve

3 功能恒温淋浴 / 浴缸本体组阀体

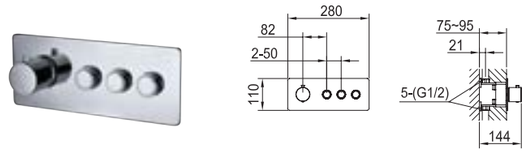

10020283701(15)

3-way thermostatic concealed shower / bath mixer

3 功能恒温淋浴 / 浴缸本体组



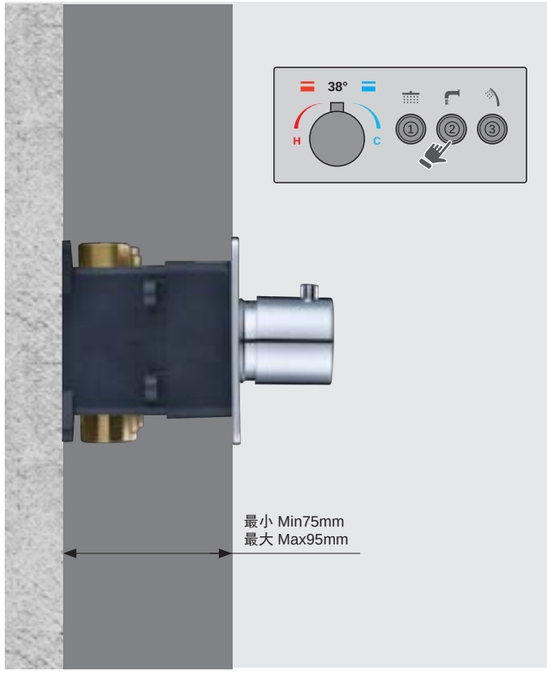







SHOWER

花洒







Simple soft line draws the clean and clear outlook; rain shower spray brings you feels of being in nature, giving you a comfortable and relaxing shower experience.

简约柔和的线条突显时尚的气息，雨淋式的喷淋仿佛置身于大自然，酣畅淋漓的淋浴体验带来无尽的乐趣。

WALL-MOUNTED HANDSHOWER SET
入墙式手握花洒组

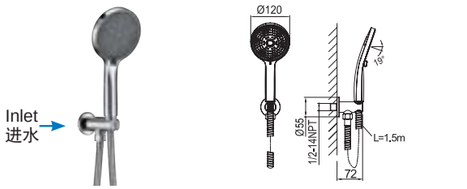

50030248301
Wall-mounted 3-jet handshower set
3 功能入墙式手握花洒组

C PBR MAG BN



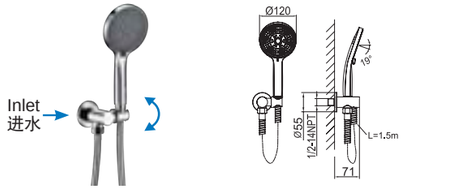

50030249801
Wall-mounted 3-jet handshower set
3 功能入墙式手握花洒组

C



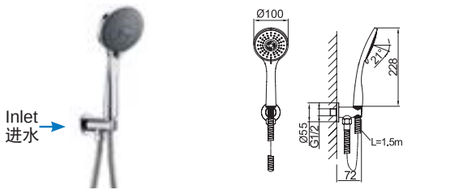

50030248601
Wall-mounted 3-jet handshower set
3 功能入墙式手握花洒组

C PBR MAG G

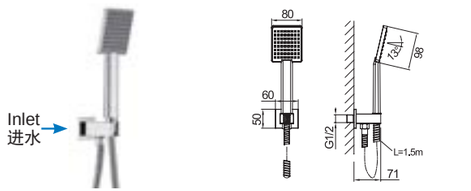

50030249101
Wall-mounted 1-jet handshower set
1 功能入墙式手握花洒组

C PBR MAG

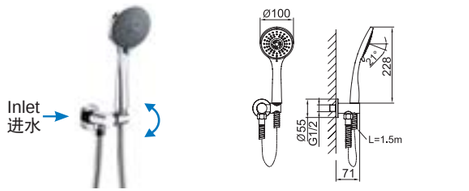

50030250101
Wall-mounted 3-jet handshower set
3 功能入墙式手握花洒组

C

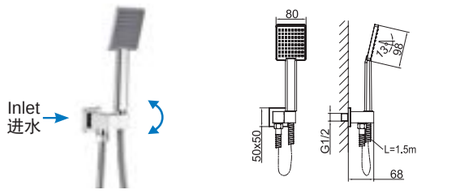

50030250701
Wall-mounted 1-jet handshower set
1 功能入墙式手握花洒组

C

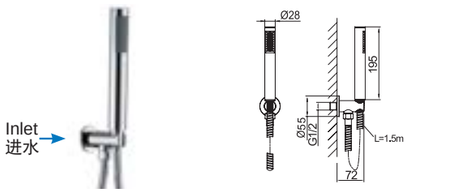

50030254101
Wall-mounted 1-jet handshower set
1 功能入墙式手握花洒组

C PBR MAG

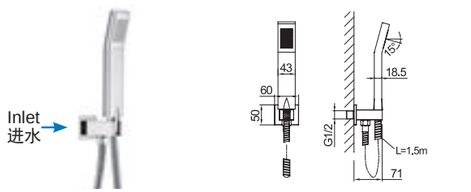

50030180301
Wall-mounted 1-jet handshower set
1 功能入墙式手握花洒组

C PBR BN

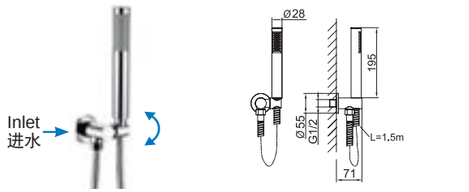

50030254201
Wall-mounted 1-jet handshower set
1 功能入墙式手握花洒组

C

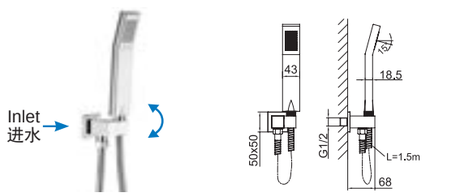

50030250601
Wall-mounted 1-jet handshower set
1 功能入墙式手握花洒组

C

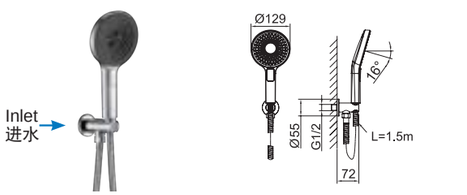

50030298101
Wall-mounted 3-jet handshower set
3 功能入墙式手握花洒组

C PBR

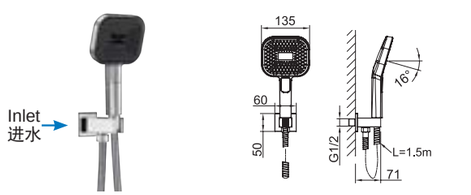

50030298201
Wall-mounted 3-jet handshower set
3 功能入墙式手握花洒组

C PBR

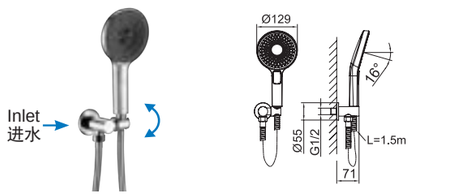

50030298301
Wall-mounted 3-jet handshower set
3 功能入墙式手握花洒组

C PBR

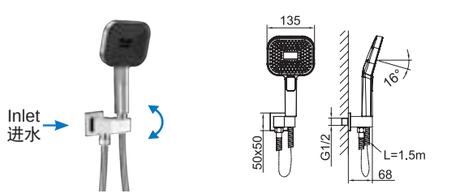

50030298401
Wall-mounted 3-jet handshower set
3 功能入墙式手握花洒组

C PBR



WALL-MOUNTED HANDSHOWER SET
壁挂式手握花洒组

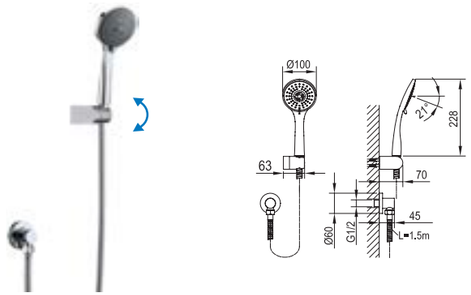

50030251101
Wall-mounted 3-jet handshower set
3 功能壁挂式手握花洒组

C PBR
MAG G

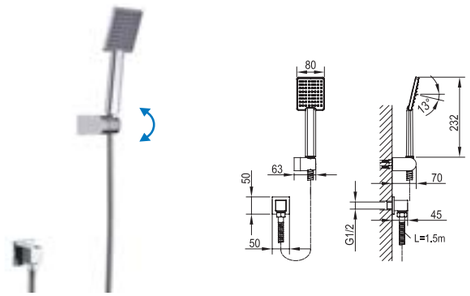

50030244601
Wall-mounted 1-jet handshower set
1 功能壁挂式手握花洒组

C PBR
MAG

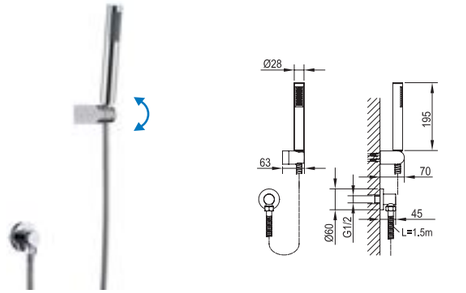

50030267601
Wall-mounted 1-jet handshower set
1 功能壁挂式手握花洒组

C PBR
MAG G

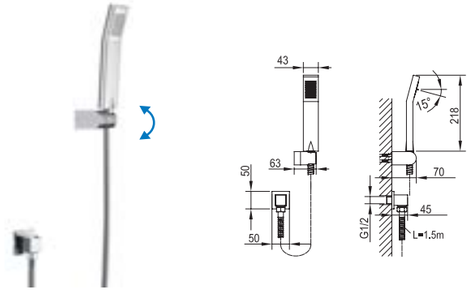

50030251001
Wall-mounted 1-jet handshower set
1 功能壁挂式手握花洒组

C PBR
BN

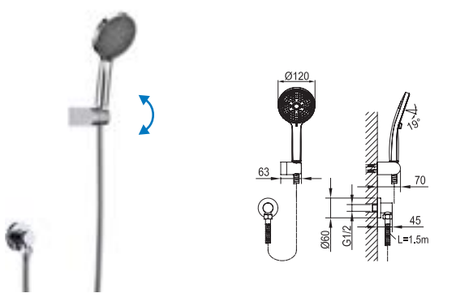

50030244701
Wall-mounted 3-jet handshower set
3 功能壁挂式手握花洒组

C PBR
MAG BN

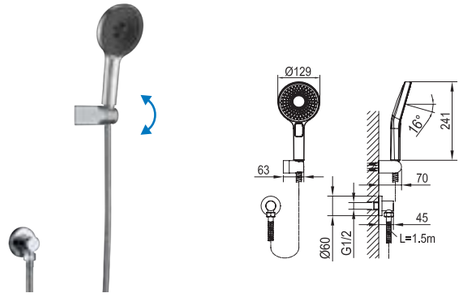

50030298501
Wall-mounted 3-jet handshower set
3 功能壁挂式手握花洒组

C PBR

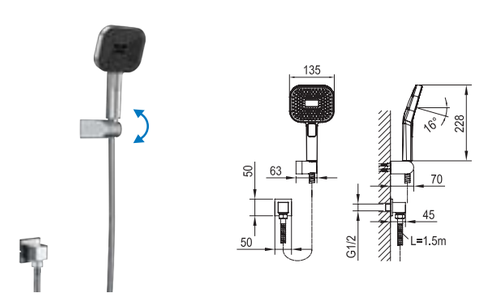

50030298601
Wall-mounted 3-jet handshower set
3 功能壁挂式手握花洒组

C PBR

WALL-MOUNTED SLIDING BAR WITH HANDSHOWER SET
壁挂式升降杆花洒组





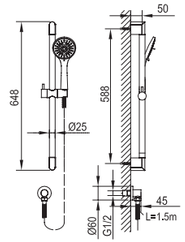

H8 7648C
Wall-mounted sliding bar
with 3-jet handshower set
3 功能壁挂式升降杆花洒组

C PBR



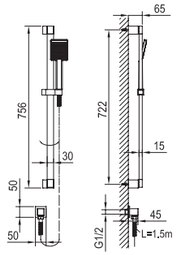

H8 7661C
Wall-mounted sliding bar
with 1-jet handshower set
1 功能壁挂式升降杆花洒组

C PBR





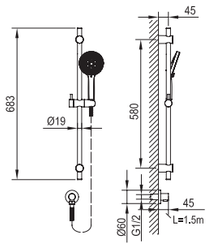

H8 7646C
Wall-mounted sliding bar
with 3-jet handshower set
3 功能壁挂式升降杆花洒组

C PBR MAG G



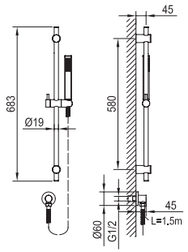

H8 7663C
Wall-mounted sliding bar
with 1-jet handshower set
1 功能壁挂式升降杆花洒组

C PBR MAG



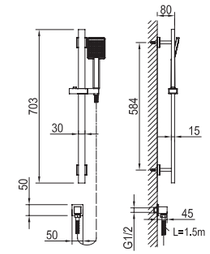

H8 7699C
Wall-mounted sliding bar
with 1-jet handshower set
1 功能壁挂式升降杆花洒组

C PBR



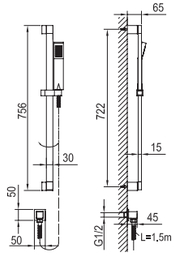

H8 7662C
Wall-mounted sliding bar
with 1-jet handshower set
1 功能壁挂式升降杆花洒组

C MAG BN



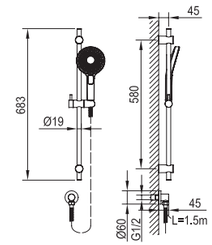

H8 7691C
Wall-mounted sliding bar
with 3-jet handshower set
3 功能壁挂式升降杆花洒组

C PBR



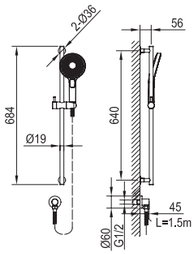

H8 7690C
Wall-mounted sliding bar
with 3-jet handshower set
3 功能壁挂式升降杆花洒组

C PBR



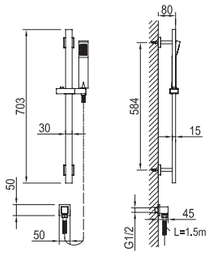

H8 7700C
Wall-mounted sliding bar
with 1-jet handshower set
1 功能壁挂式升降杆花洒组

C PBR



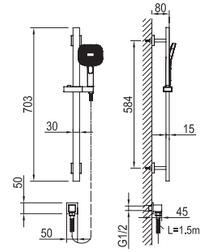

H8 7692C
Wall-mounted sliding bar
with 3-jet handshower set
3 功能壁挂式升降杆花洒组

C PBR

HANDSHOWER SET
手握花洒组

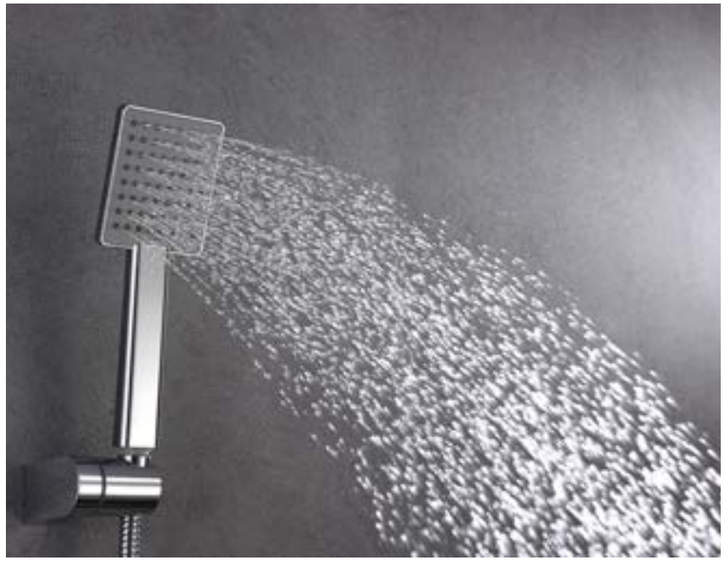





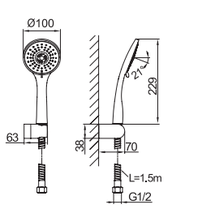

50030244101
3-jet handshower set
3 功能手握花洒组

C PBR
MAG G



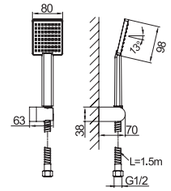

50030248001
1-jet handshower set
1 功能手握花洒组

C PBR
MAG



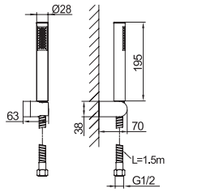

50030254001
1-jet handshower set
1 功能手握花洒组

C PBR
MAG



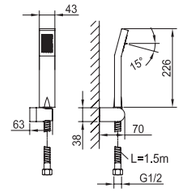

50030247901
1-jet handshower
1 功能手握花洒组

C PBR
BN



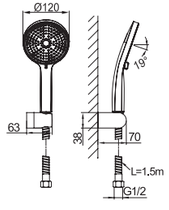

50030244201
3-jet handshower set
3 功能手握花洒组

C PBR
MAG BN



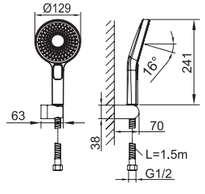

50030299201
3-jet handshower set
3 功能手握花洒组

C PBR



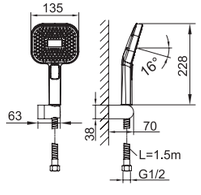

50030299301
3-jet handshower set
3 功能手握花洒组

C PBR

HANDSHOWER
手握花洒











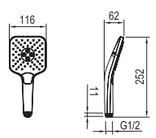

50030281901
3-jet handshower
3 功能手握花洒

C



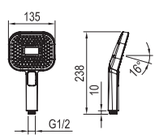

50030297401
3-jet handshower
3 功能手握花洒

C PBR



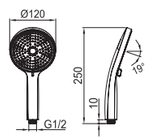

50030281801
3-jet handshower (Φ120)
3 功能手握花洒 (Φ120)

C PBR MAG BN



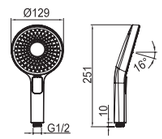

50030297301
3-jet handshower(Φ100)
3 功能手握花洒 (Φ100)

C PBR



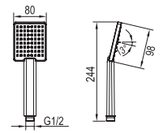

50030084801
1-jet handshower
1 功能手握花洒

C PBR MAG BN



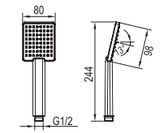

50030098401
1-jet handshower
1 功能手握花洒

C



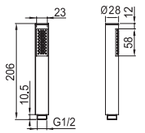

50030089801
1-jet handshower
1 功能手握花洒

C PBR MAG



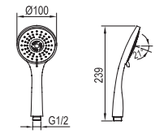

50030131501
3-jet handshower(Φ100)
3 功能手握花洒 (Φ100)

C PBR MAG G



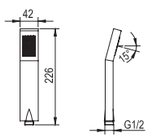

50030053401
1-jet handshower
1 功能手握花洒

C PBR BN



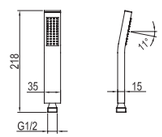

50030291501
1-jet handshower
1 功能手握花洒

C GUG MAG BN



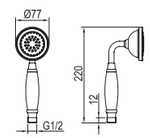

50030259201
1-jet handshower(Φ77)
1 功能手握花洒 (Φ77)

C G



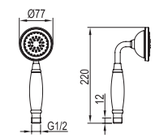

50030277201
1-jet handshower(Φ77)
1 功能手握花洒 (Φ77)

C

SLIDING BAR

淋浴升降杆

With smooth edge and pretty outline, convenient dual-functional design, combining sliding bar with handhshower holder, RISE, makes your bathroom into a relaxing living space.

柔滑的边缘，雅观的外型，便捷的双功能设计，升降杆和花洒座一体，使浴室成为一个轻松的生活空间。







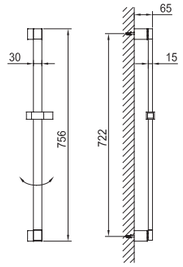

H8 7607C
Sliding bar(30x15)mm
淋浴升降杆 (30x15)mm

C



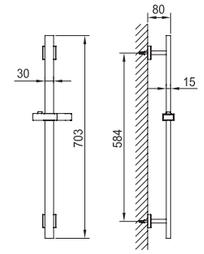

H8 7696C
Sliding bar(30x15)mm
淋浴升降杆 (30x15)mm

C
GUG
PBR
MAG
BN



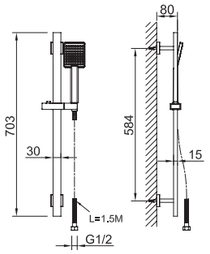

H8 7697C
Sliding bar with 1-jet handshower set
升降杆花洒组

C
GUG
PBR
MAG
BN



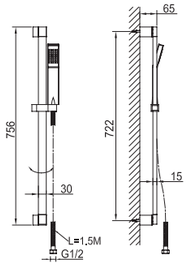

H8 7616C
Sliding bar with 1-jet handshower set
升降杆花洒组

C
PBR



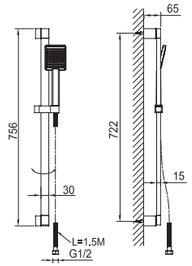

H8 7605C
Sliding bar with 1-jet handshower set
升降杆花洒组

C
PBR



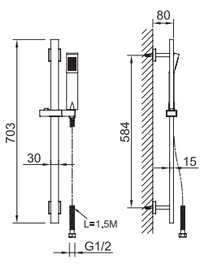

H8 7698C
Sliding bar with 1-jet handshower set
升降杆花洒组

C
GUG
PBR
MAG
BN



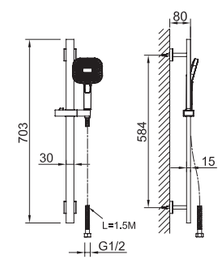

H8 7695C
Sliding bar with 3-jet handshower set
升降杆花洒组

C
PBR

SLIDING BAR 淋浴升降杆

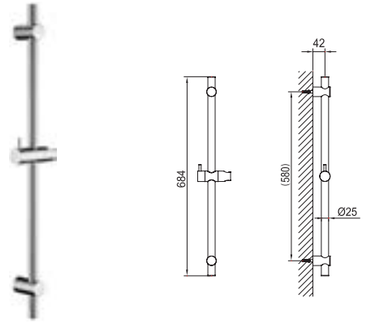

H8 7641C
Sliding bar (Φ25)
淋浴升降杆 (Φ25)

C

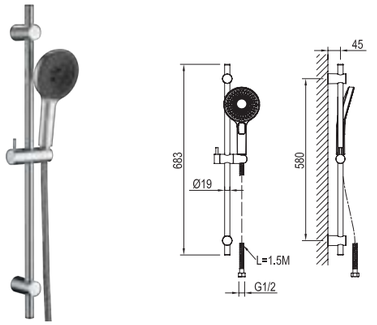

H8 7694C
Sliding bar with 3-jet handshower set
升降杆花洒组

C PBR

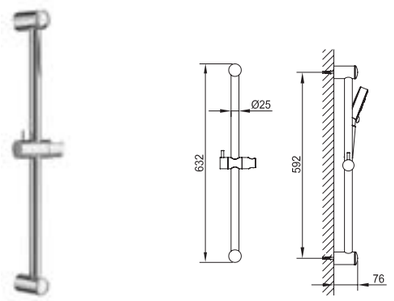

H8 7636C
Sliding bar (Φ25)
淋浴升降杆 (Φ25)

C

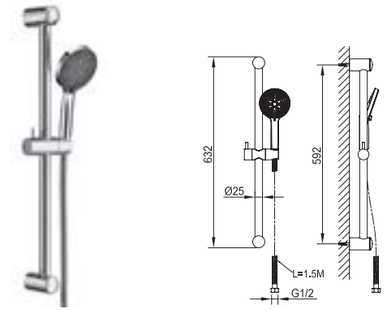

H8 7669C
Sliding bar with 3-jet handshower set
升降杆花洒组

C

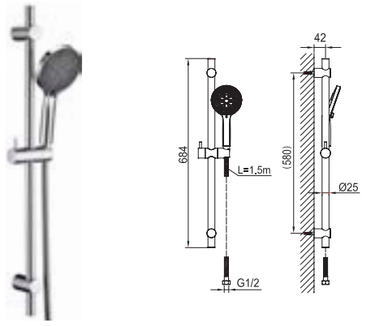

H8 7643C
Sliding bar with 3-jet handshower set
升降杆花洒组

C PBR MAG

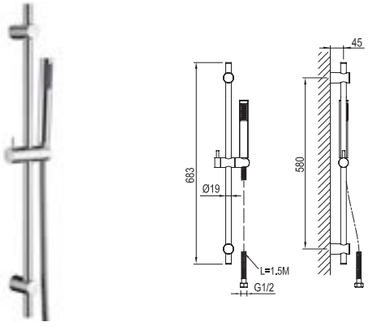

H8 7659C
Sliding bar with 1-jet handshower set
升降杆花洒组

C PBR MAG

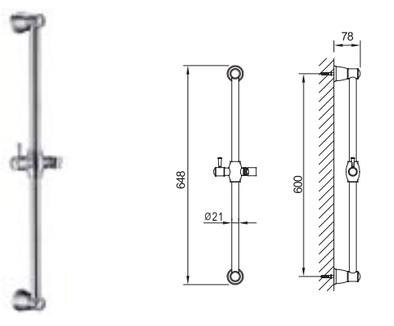

H8 7656C
Sliding bar(Φ21)
淋浴升降杆 (Φ21)

C

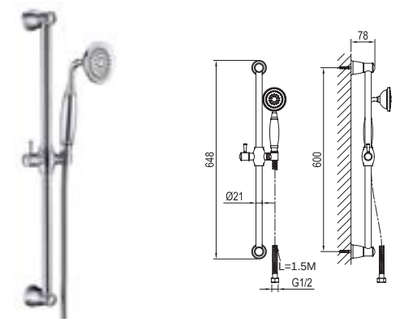

H8 7603C
Sliding bar with 1-jet handshower set
升降杆花洒组

C BN MAG

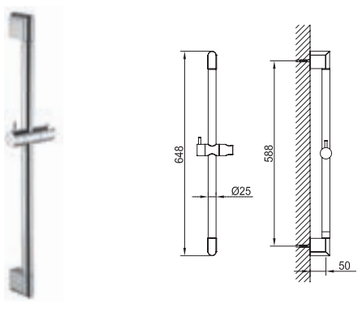

H8 7628C
Sliding bar (Φ25)
淋浴升降杆 (Φ25)

C

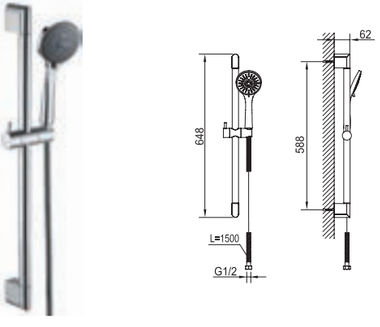

H8 7664C
Sliding bar with 3-jet handshower set
升降杆花洒组

C PBR

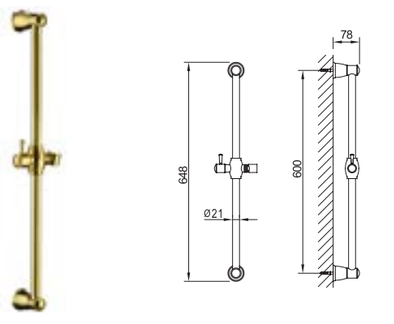

H8 7656G
Sliding bar(Φ21)
淋浴升降杆 (Φ21)

G

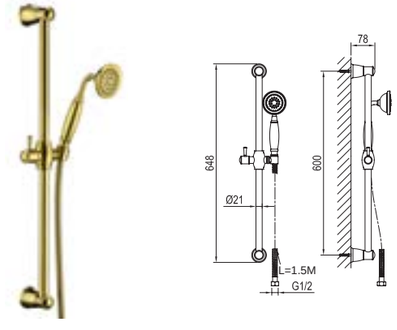

H8 7603G
Sliding bar with 1-jet handshower set
升降杆花洒组

G





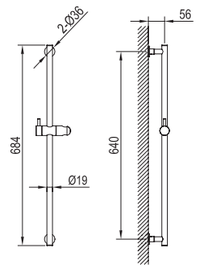

H8 7922C
Sliding bar (Φ19)
淋浴升降杆 (Φ19)

C



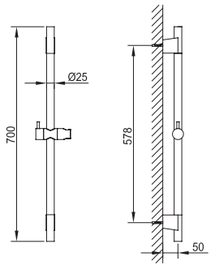

H8 7626C
Sliding bar (Φ25)
淋浴升降杆 (Φ25)

C



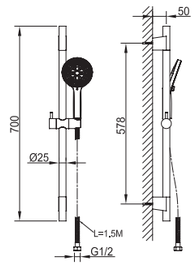

H8 7627C
Sliding bar with 3-jet handshower set
升降杆花洒组

C



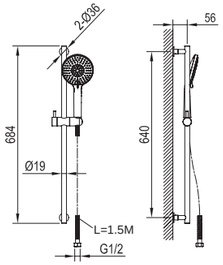

H8 7938C
Sliding bar with 3-jet handshower set
升降杆花洒组

C
PBR
MAG



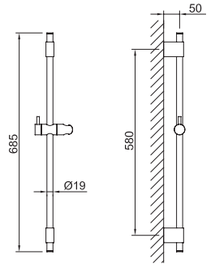

H8 7614C
Sliding bar (Φ19)
淋浴升降杆 (Φ19)

C



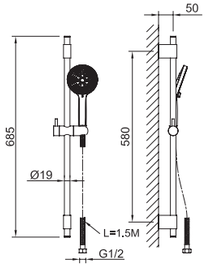

H8 7610C
Sliding bar with 3-jet handshower set
升降杆花洒组

C
PBR



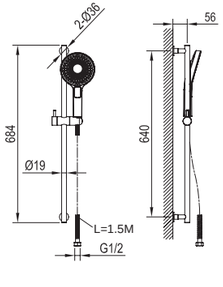

H8 7693C
Sliding bar with 3-jet handshower set
升降杆花洒组

C



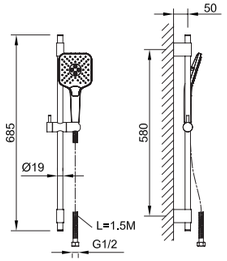

H8 7675C
Sliding bar with 3-jet handshower set
升降杆花洒组

C



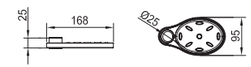

50030179101
Soap dish (Φ25)
皂碟 (Φ25)

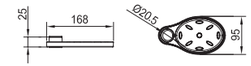

50030181801
Soap dish (Φ20.5)
皂碟 (Φ20.5)

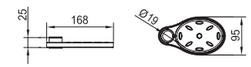

50030181901
Soap dish (Φ19)
皂碟 (Φ19)

SHOWER ARM WITH SHOWER HEAD
淋浴龙头花洒组

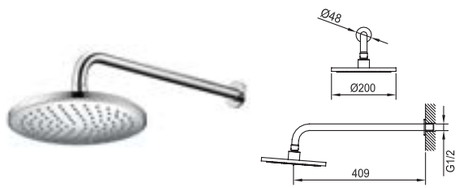

50030114701
Shower arm with shower head(8")
淋浴龙头花洒组 (8")

C PBR MAG BN



50030255901
Shower arm with shower head(10")
淋浴龙头花洒组 (10")

C PBR

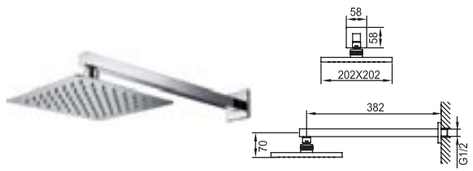

50030253501
Shower arm with shower head(202x202) mm
淋浴龙头花洒组 (202x202) mm

C

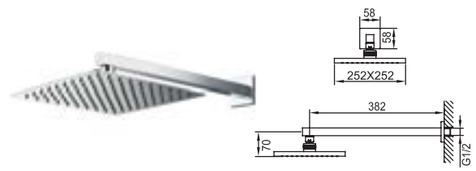

50030245601
Shower arm with shower head(252x252) mm
淋浴龙头花洒组 (252x252) mm

C



50030245801
Shower arm with shower head(8")
淋浴龙头花洒组 (8")

C

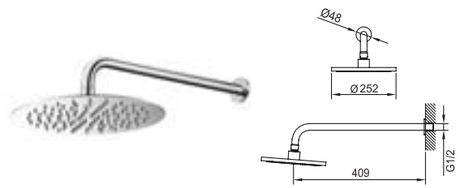

50030245901
Shower arm with shower head(10")
淋浴龙头花洒组 (10")

C

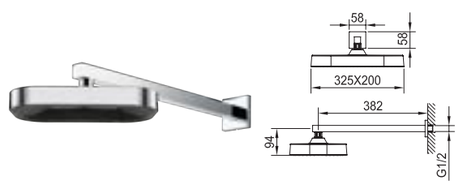

50030297801
Shower arm with shower head(325x200) mm
淋浴龙头花洒组 (325x200) mm

C PBR

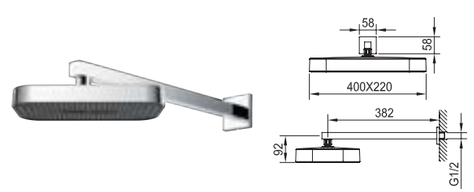

50030297901
Shower arm with shower head(400x200) mm
淋浴龙头花洒组 (400x200) mm

C PBR

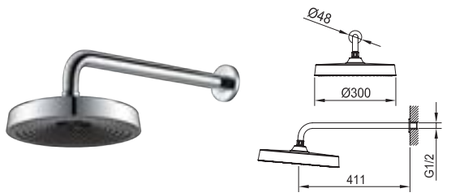

50030298001
Shower arm with shower head(12")
淋浴龙头花洒组 (12")

C PBR

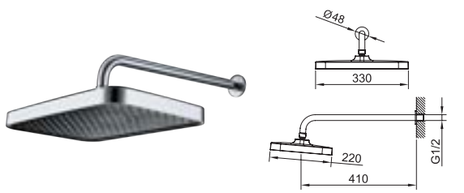

50030261001
Shower arm with shower head
(330x220) mm
淋浴龙头花洒组 (330x220) mm

C

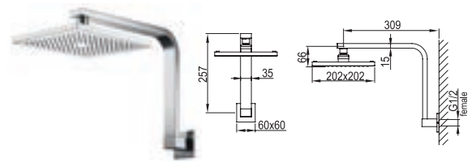

50030204401
Shower arm with shower head(202x202) mm
淋浴龙头花洒组 (202x202) mm

C PBR MAG BN

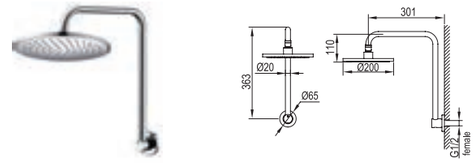

50030255601
Shower arm with shower head(8")
淋浴龙头花洒组 (8")

C PBR MAG BN

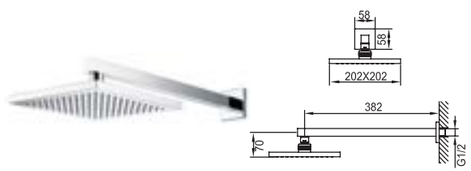

50030224501
Shower arm with shower head(202x202) mm
淋浴龙头花洒组 (202x202) mm

C PBR MAG BN

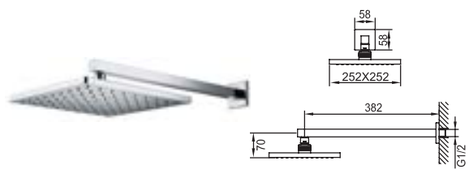

50030223401
Shower arm with shower head(252x252) mm
淋浴龙头花洒组 (252x252) mm

C PBR

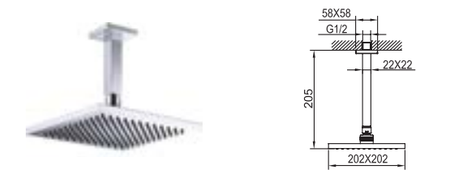

50030269701
Ceiling shower arm with shower head
(202x202) mm
顶置式花洒组 (202x202) mm

C PBR

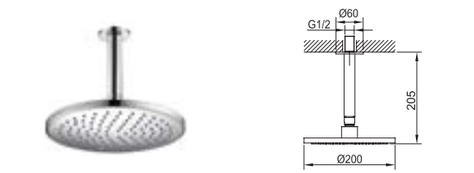

50030269801
Ceiling shower arm with shower head(8")
顶置式花洒组 (8")

C PBR

OVERHEAD RAIN SHOWER
头顶花洒

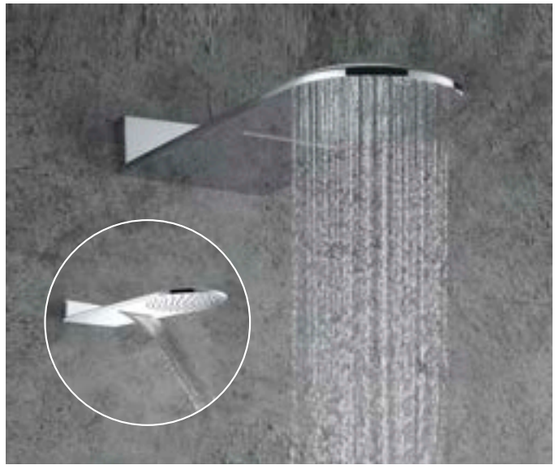





50030132701
2-way overhead rain shower (600x250)mm
2 功能头顶花洒 (600x250)mm
C



50030132801
2-way overhead rain shower (600x250)mm
2 功能头顶花洒 (600x250)mm
C



50030297501
Overhead rain shower (12")
头顶花洒 (12")
C PBR



50030107501
Overhead rain shower (6")
头顶花洒 (6")
C PBR



50030107701
Overhead rain shower (8")
头顶花洒 (8")
C PBR



50030109201
Overhead rain shower (8")
头顶花洒 (8")
C BN BNB MAG



50030112901
Overhead rain shower (10")
头顶花洒 (10")
C



50030132301
Overhead rain shower (8")
头顶花洒 (不锈钢) (8")
C

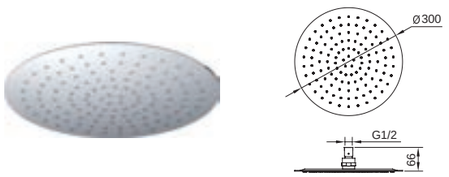

50030132501
Overhead rain shower (12")
头顶花洒 (不锈钢) (12")
C



50030279001
Overhead rain shower (9")
头顶花洒 (9")
C



50030242101
Overhead rain shower (6")
头顶花洒 (不锈钢) (6")
C



50030132401
Overhead rain shower (10")
头顶花洒 (不锈钢) (10")
C



50030132601
Overhead rain shower (16")
头顶花洒 (不锈钢) (16")
C


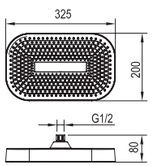

50030297601
Overhead rain shower (325x200)mm
头顶花洒 (325x200)mm

C PBR


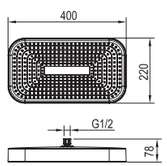

50030297701
Overhead rain shower (400x200)mm
头顶花洒 (400x200)mm

C PBR




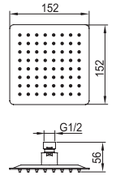

50030201401
Overhead rain shower (152x152)mm
头顶花洒 (不锈钢) (152x152)mm

C


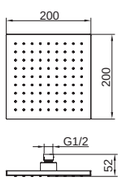

50030271501
Overhead rain shower (200x200)mm
头顶花洒 (200x200)mm

C BNG
BNB MAG


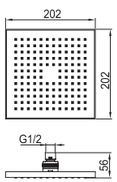

50030091501
Overhead rain shower (202x202)mm
头顶花洒 (202x202)mm

C PBR


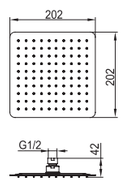

50030237801
Overhead rain shower (202x202)mm
头顶花洒 (不锈钢) (202x202)mm

C


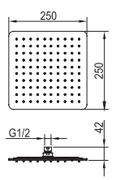

50030131801
Overhead rain shower (250x250)mm
头顶花洒 (不锈钢) (250x250)mm

C


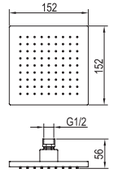

50030207801
Overhead rain shower (152x152)mm
头顶花洒 (152x152)mm

C PBR


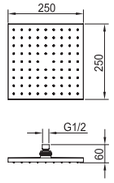

50030144701
Overhead rain shower (250x250)mm
头顶花洒 (250x250)mm

C PBR


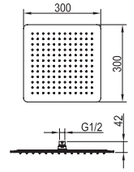

50030131901
Overhead rain shower (300x300)mm
头顶花洒 (不锈钢) (300x300)mm

C


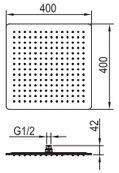

50030132001
Overhead rain shower (400x400)mm
头顶花洒 (不锈钢) (400x400)mm

C


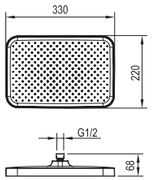

50030268401
Overhead rain shower (330x220)mm
头顶花洒 (330x220)mm

C


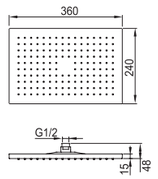

50030097801
Overhead rain shower (360x240)mm
头顶花洒 (360x240)mm

C


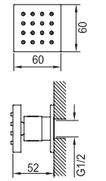

50030174501
Body jet (60x60)mm
身体花洒 (60x60)mm

C


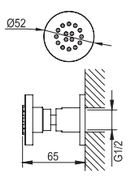

50030236201
Body jet (Φ52)mm
身体花洒 (Φ52)mm

C

SHOWER ARM
淋浴龙头花洒管




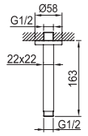

50040181201 C
Shower arm 6"(163x22x22)mm
淋浴龙头花洒管 6"(163x22x22)mm


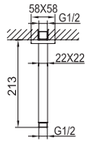

50040198401 C
Shower arm 8"(213x22x22) mm
淋浴龙头花洒管 8"(213x22x22)mm


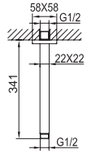

50040205601 C
Shower arm 13"(341x22x22)mm
淋浴龙头花洒管 13"(341x22x22)mm


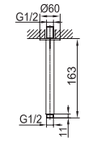

50040205901 C
Shower arm 6"(163xΦ20.5)mm
淋浴龙头花洒管 6"(163xΦ20.5)mm


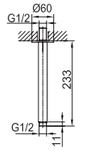

50040207101 C
Shower arm 8.74"(233xΦ20.5)mm
淋浴龙头花洒管 8.74"(233xΦ20.5)mm


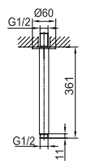

50040206001 C
Shower arm 13"(361xΦ20.5)mm
淋浴龙头花洒管 13"(361xΦ20.5)mm


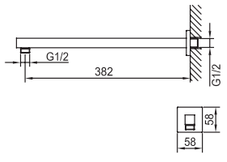

50040181301 C
Shower arm (382x22x22)mm
淋浴龙头花洒管 (382x22x22)mm


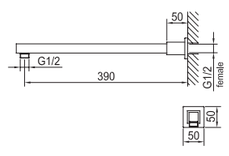

50040219301 C
Shower arm(G1/2 female) (390x22x22)mm
淋浴龙头花洒管 (内螺纹) (390x22x22)mm




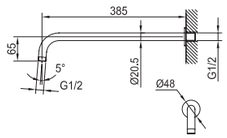

50040212901 C
Shower arm (385xΦ20.5)mm
淋浴龙头花洒管 (385xΦ20.5)mm


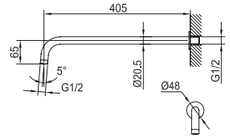

50040188301 C
Shower arm (405xΦ20.5)mm
淋浴龙头花洒管 (405xΦ20.5)mm


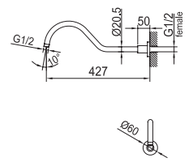

50030231501 C
Shower arm(G1/2 female) (427xΦ20.5)mm
淋浴龙头花洒管 (内螺纹) (427xΦ20.5)mm


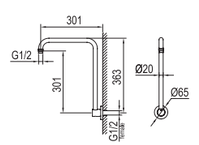

50030129901 C
Shower arm (G1/2 female)
淋浴龙头花洒管




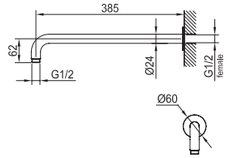

50040219401 C
Shower arm (G1/2 female) (385xΦ24)mm
淋浴龙头花洒管 (内螺纹) (385xΦ24)mm


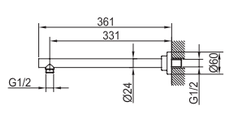

50040145001 C
Shower arm (360xΦ24)mm
淋浴龙头花洒管 (360xΦ24)mm


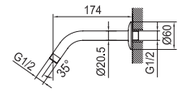

50030094101 C
Shower arm(174xΦ20.5)mm
淋浴龙头花洒管 (174xΦ20.5)mm


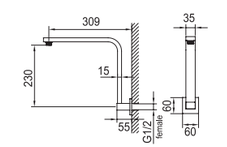

50030129801 C
Shower arm (G1/2 female)
淋浴龙头花洒管

SHOWER WALL OUTLET/ SHOWER HOLDER

入墙淋浴出水件 / 花洒座


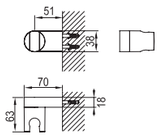

50030087401
Adjustable shower hook
活动花洒座

C PBR BN


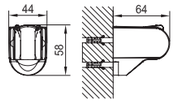

50030285001
Adjustable shower hook
活动花洒座

C PBR MAG GUG



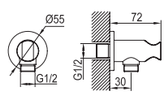

50030139801
Dual-function shower holder
2 功能花洒座 (G1/2)

C



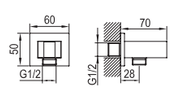

50030140001
Dual-function shower holder
2 功能花洒座 (G1/2)

C



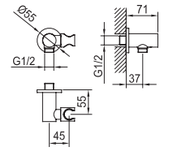

50030235701
Dual-function shower hook G1/2XG1/2
2 功能活动花洒座 (G1/2)

C



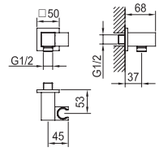

50030235801
Dual-function shower hook G1/2XG1/2
2 功能活动花洒座 (G1/2)

C


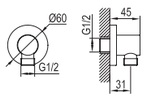

91 2974C
Shower wall outlet (G1/2)
入墙淋浴出水件 (G1/2）

C


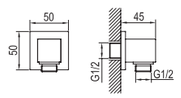

91 2976C
Shower wall outlet(G1/2)
入墙淋浴出水件 (G1/2）

C

FLEXIBLE HOSE

花洒软管




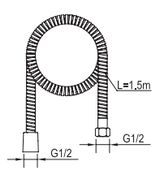

50040054201
G1/2×G1/2 flexible hose(1500mm)
花洒软管 G1/2×G1/2(1500mm)


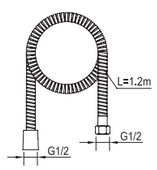

50040029701
G1/2×G1/2 flexible hose(1200mm)
花洒软管 G1/2×G1/2(1200mm)


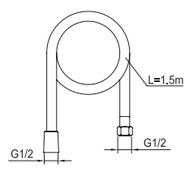

50040213340
G1/2×G1/2 Silicone hose (1500mm)
硅胶花洒软管 G1/2×G1/2(1500mm)


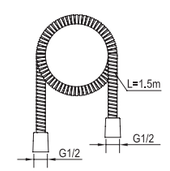

50040036300
G1/2×G1/2 flexible hose (1500mm)
花洒软管 G1/2×G1/2(1500mm)


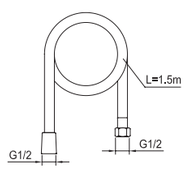

50040213249
G1/2×G1/2 Silicone hose (1500mm)
硅胶花洒软管 G1/2×G1/2(1500mm)


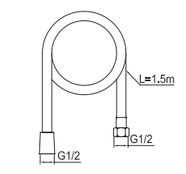

50040074431
G1/2×G1/2 PVC flexible hose (1500mm)
花洒软管 G1/2×G1/2PVC (1500mm)



TUB SPOUT
浴缸出水嘴


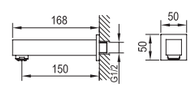

30020041801
Tub spout (150mm)
浴缸出水嘴
C


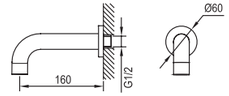

30020041701
Tub spout (160mm)
浴缸出水嘴
C


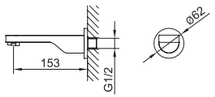

30020016301
Tub spout (153mm)
浴缸出水嘴
C


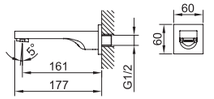

30020009201
Tub spout (161mm)
浴缸出水嘴
C


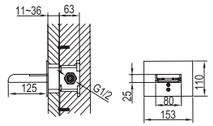

30020015901
Tub spout (80x25x125)mm
瀑布浴缸出水嘴
C


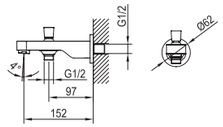

30020025101
Tub spout (152mm)
浴缸出水嘴
C


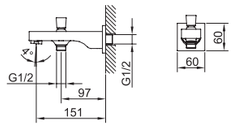

30020025001
Tub spout (151mm)
浴缸出水嘴
C


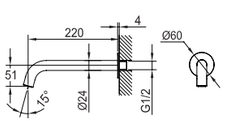

30010047301(120mm)
30010047501(160mm)
30010047601(180mm)
30010047701(220mm)
Tub spout
出水嘴
C


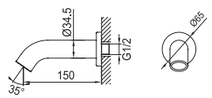

30020002201
Tub spout (150mm)
浴缸出水嘴
C


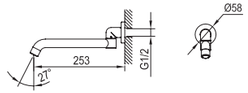

30020026901
Tub spout (253mm)
浴缸出水嘴
C


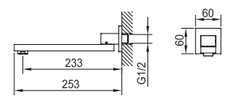

30020026801
Tub spout (233mm)
浴缸出水嘴
C

FINISHES

表面处理



C
Chrome Plating
镀铬
 # 01



G
Light Gold
锆金
 # 05



BN
Brushed Nickel
拉丝镍
 # 09



TBN
Spot Free
Stainless Steel
无指纹拉丝镍
 # 10



PBN
Brushed Nickel
拉丝镍
 # 14



MAW
Matte White
哑光白
 # 40



GUG
Gun Grey
枪灰
 # 42



PTG
Spot Free
Brushed Gold
无指纹拉丝金
 # 47



PBR
Matte Black
哑光黑
 # 49



TBG
Brushed Gold
哑光拉丝金
 # 68



TBC
Antique Brushed
Copper
哑光拉丝铜
 # 69



MAG
Brushed Gold
拉丝金
 # 74



DBA
Dark Brass with
Red Brim
镀黑色拉丝拉红边
 # 76

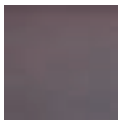

DBR
Dark Brass
镀黑色拉丝
 # 77



RG
Rose Copper
玫瑰铜
 # 84



PGB
Onyx Black
磨砂黑
 # 86



TRG
Spot Free
Brushed Copper
无指纹拉丝铜
 # 90



PMAG
Spot Free Matte
Gold
无指纹哑光金
 # 91



BNB
Brushed Brass
拉丝铜
 # 92



TG
Dark Gold
钛金
 # 95



PBR
Matte Black
哑光黑
 # 49

/

C
Chrome Plating
镀铬
 # 01



PBR
Matte Black
哑光黑
 # 49

/

TBN
Spot Free Stainless Steel
无指纹拉丝镍
 # 10



PBR
Matte Black
哑光黑
 # 49

/

PBN
Brushed Nickel
拉丝镍
 # 14



PGB
Onyx Black
磨砂黑
 # 86

/

PBN
Brushed Nickel
拉丝镍
 # 14



PBR
Matte Black
哑光黑
 # 49

/

MAG
Brushed Gold
拉丝金
 # 74



PBR
Matte Black
哑光黑
 # 49

/

PTG
Spot Free Brushed Gold
无指纹拉丝金
 # 47



PBR
Matte Black
哑光黑
 # 49

/

BNB
Brushed Brass
拉丝铜
 # 92